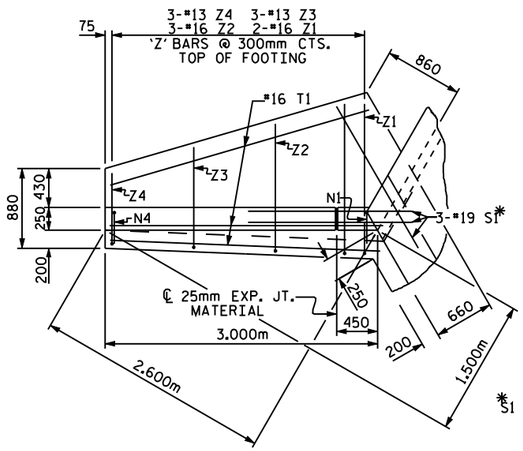

PLAN W2

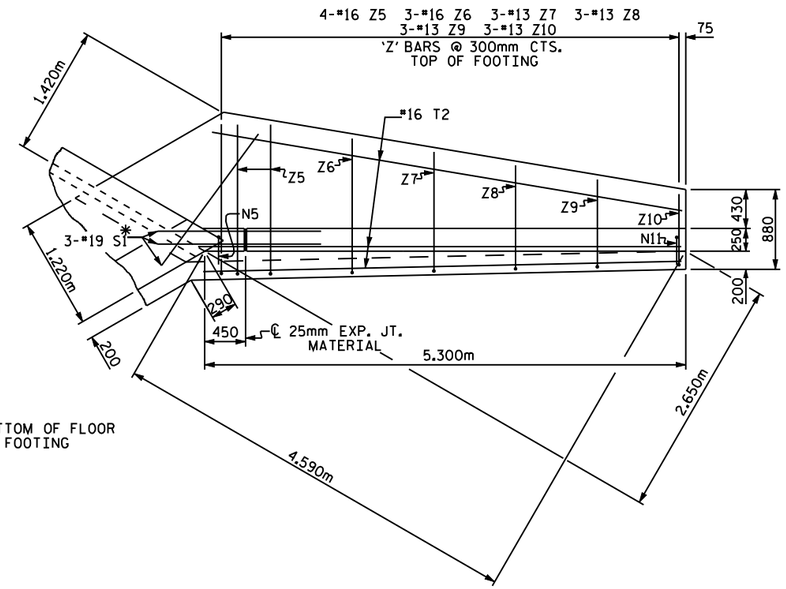

PLAN W1

*S1 BARS @ BOTTOM OF FLOOR SLAB AND FOOTING

BAR TYPES

ALL BAR DIMENSIONS ARE OUT TO OUT.

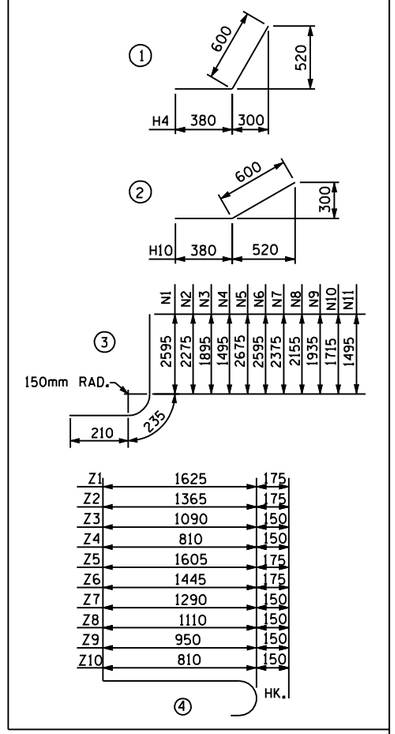

BILL OF MATERIAL

BAR	NO.	SIZE	TYPE	LENGTH	WEIGHT
H1	12	13	STR	2440	29
H2	4	13	STR	2240	9
H3	4	13	STR	1200	5
H4	24	13	1	980	23
H5	4	13	STR	2640	10
H6	12	13	STR	4740	57
H7	4	13	STR	4460	18
H8	4	13	STR	2600	10
H9	4	13	STR	760	3
H10	24	13	2	980	23
H11	4	13	STR	4860	19
N1	4	16	3	3040	19
N2	6	16	3	2720	25
N3	6	13	3	2340	14
N4	6	13	3	1940	12
N5	4	16	3	3120	19
N6	4	16	3	3040	19
N7	6	16	3	2820	26
N8	6	16	3	2600	24
N9	6	13	3	2380	14
N10	6	13	3	2160	13
N11	6	13	3	1940	12
S1	12	19	STR	1800	48
T1	6	16	STR	3000	28
T2	6	16	STR	5300	49
V1	4	13	STR	2420	10
V2	6	13	STR	2100	13
V3	6	13	STR	1720	10
V4	6	13	STR	1320	8
V5	4	13	STR	2500	10
V6	4	13	STR	2420	10
V7	6	13	STR	2200	13
V8	6	13	STR	1980	12
V9	6	13	STR	1760	10
V10	6	13	STR	1540	9
V11	6	13	STR	1320	8
Z1	4	16	4	1800	11
Z2	6	16	4	1540	14
Z3	6	13	4	1240	7
Z4	6	13	4	960	6
Z5	8	16	4	1780	22
Z6	6	16	4	1620	15
Z7	6	13	4	1440	9
Z8	6	13	4	1260	8
Z9	6	13	4	1100	7
Z10	6	13	4	960	6

REINFORCING STEEL FOR 4 WING WALLS 746 kg

CLASS A CONCRETE
4 WINGS 17.5 m^3
2 HEADWALLS _____ m^3
2 END CURTAIN WALLS _____ m^3
TOTAL _____ m^3

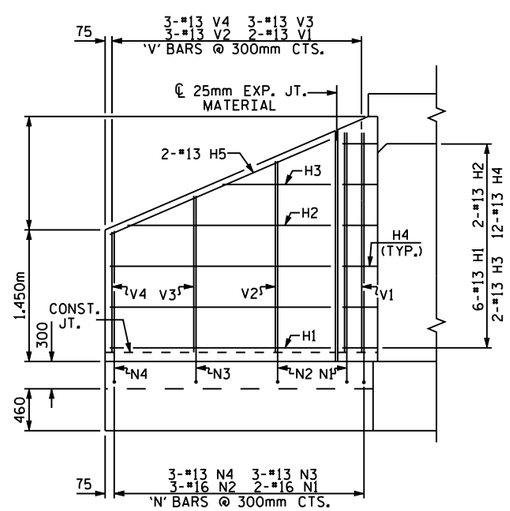

ELEVATION W2

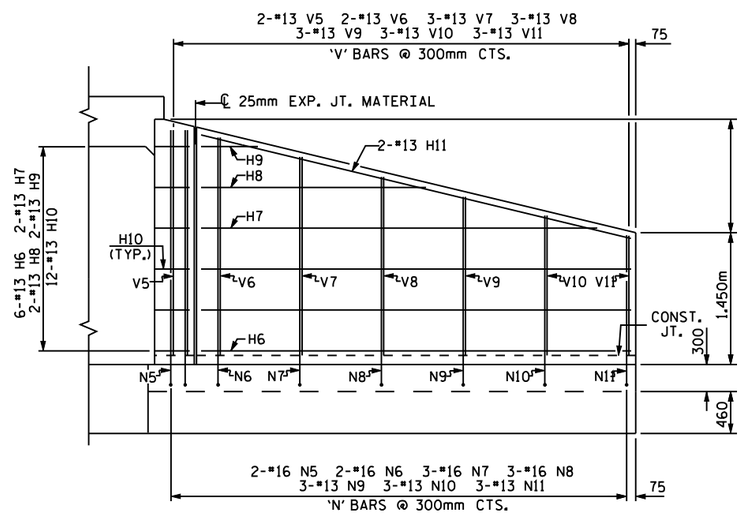

ELEVATION W1

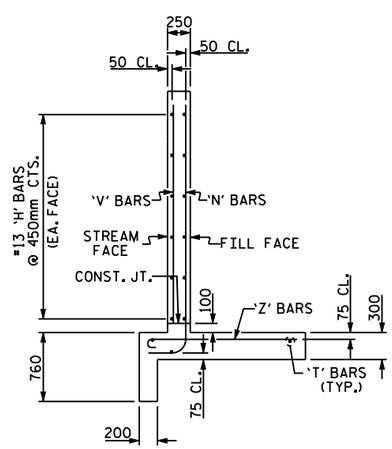

TYPICAL WING SECTION

FOR WING ORIENTATION, SEE BARREL STANDARD SHEET.

PROJECT NO. _____

_____ COUNTY

STATION: _____

SHEET OF

STATE OF NORTH CAROLINA
DEPARTMENT OF TRANSPORTATION
RALEIGH

STANDARD WINGS FOR CONCRETE BOX CULVERT

H=2.400m SLOPE=2:1
60° OR 120° SKEW

REVISIONS						SHEET NO.
NO.	BY:	DATE:	NO.	BY:	DATE:	
1			3			TOTAL SHEETS
2			4			

ASSEMBLED BY : DATE :
CHECKED BY : DATE :

DRAWN BY : JLR 6/97
CHECKED BY : VAP 6/97

STD. NO. CW6024