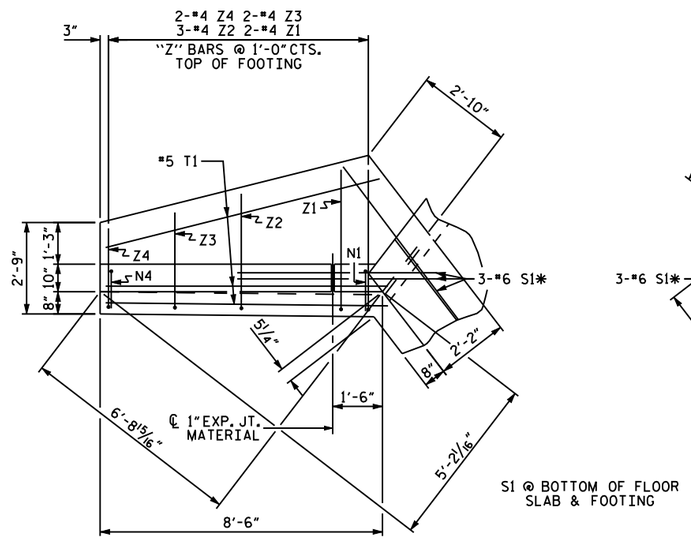

PLAN W2

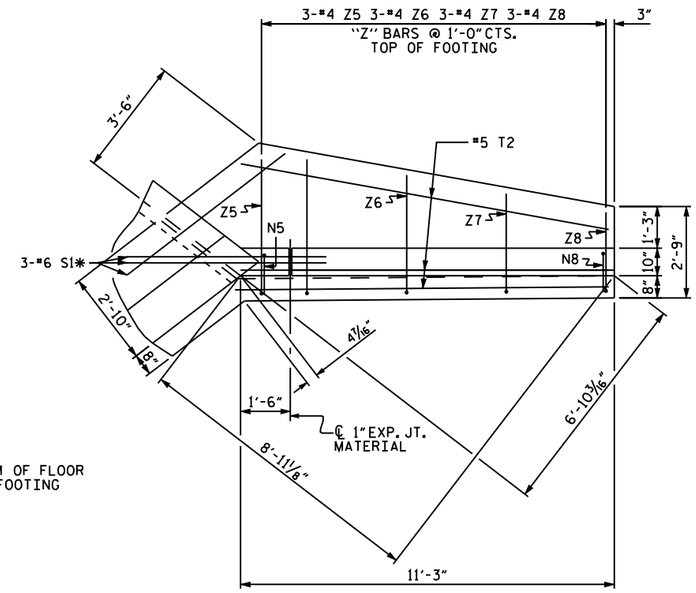

PLAN W1

S1 @ BOTTOM OF FLOOR SLAB & FOOTING

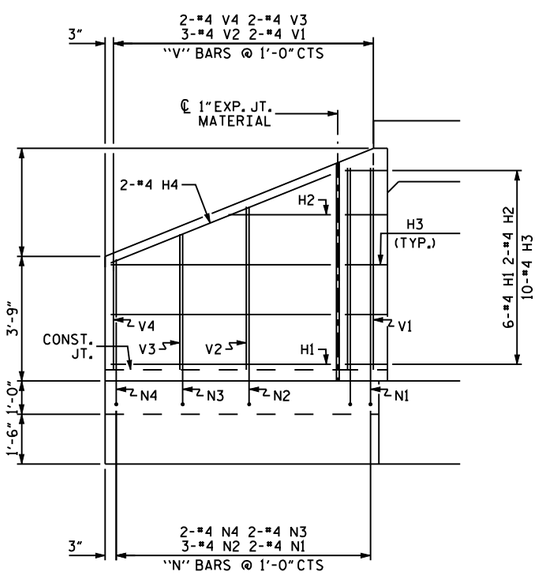

ELEVATION W2

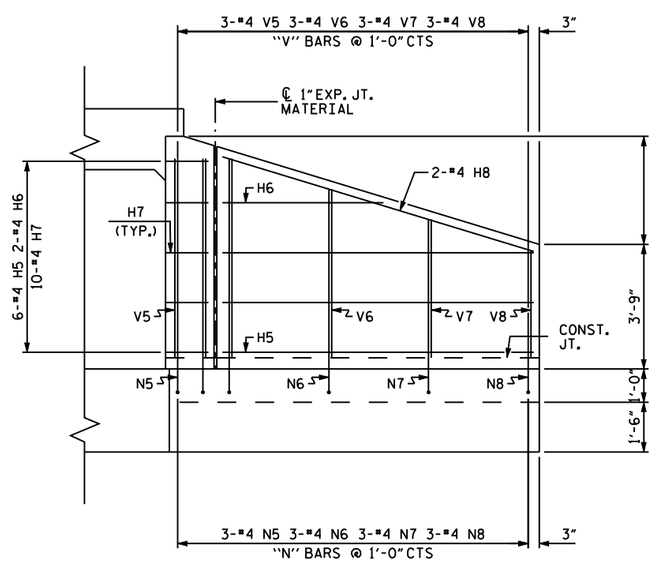

ELEVATION W1

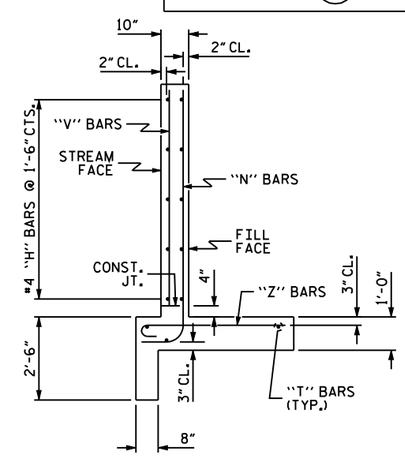

TYPICAL WING SECTION

BAR TYPES

ALL BAR DIMENSIONS ARE OUT TO OUT.

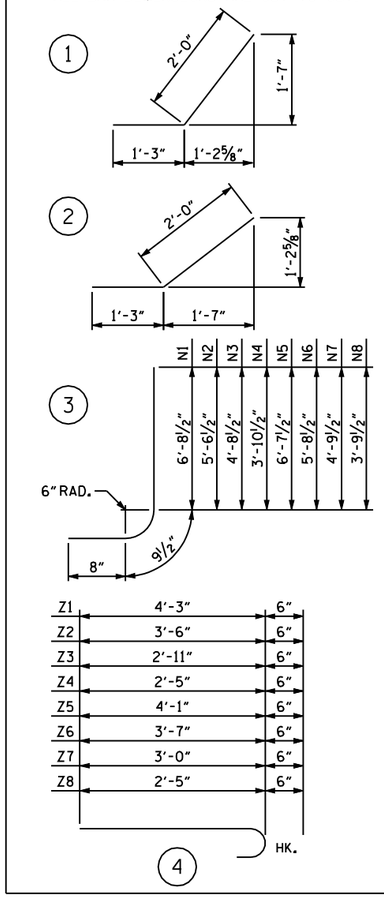

BILL OF MATERIAL

BAR	NO.	SIZE	TYPE	LENGTH	WEIGHT
H1	12	#4	STR	6'-7"	53
H2	4	#4	STR	3'-1"	8
H3	20	#4	1	3'-3"	43
H4	4	#4	STR	7'-1"	19
H5	12	#4	STR	9'-4"	75
H6	4	#4	STR	4'-10"	13
H7	20	#4	2	3'-3"	43
H8	4	#4	STR	9'-9"	26
N1	4	#4	3	8'-2"	22
N2	6	#4	3	7'-1"	28
N3	4	#4	3	6'-2"	16
N4	4	#4	3	5'-4"	14
N5	6	#4	3	8'-1"	32
N6	6	#4	3	7'-2"	29
N7	6	#4	3	6'-3"	25
N8	6	#4	3	5'-3"	21
S1	12	#6	STR	6'-0"	108
T1	6	#5	STR	8'-6"	53
T2	6	#5	STR	11'-3"	70
V1	4	#4	STR	6'-1"	16
V2	6	#4	STR	4'-11"	20
V3	4	#4	STR	4'-1"	11
V4	4	#4	STR	3'-4"	9
V5	6	#4	STR	6'-0"	24
V6	6	#4	STR	5'-1"	20
V7	6	#4	STR	4'-2"	17
V8	6	#4	STR	3'-3"	13
Z1	4	#4	4	4'-9"	13
Z2	6	#4	4	4'-0"	16
Z3	4	#4	4	3'-5"	9
Z4	4	#4	4	2'-11"	8
Z5	6	#4	4	4'-7"	18
Z6	6	#4	4	4'-1"	16
Z7	6	#4	4	3'-6"	14
Z8	6	#4	4	2'-11"	12

REINFORCING STEEL FOR 4 WINGS	934 LBS
CLASS A CONCRETE	
4 WINGS	14.2 CY
2 HEADWALLS	CY
2 END CURTAIN WALLS	CY
TOTAL	CY

PROJECT NO. _____

_____ COUNTY

STATION: _____

STATE OF NORTH CAROLINA
DEPARTMENT OF TRANSPORTATION
RALEIGH

STANDARD WINGS FOR CONCRETE BOX CULVERT

H = 6'-0" SLOPE = 2:1
75° OR 105° SKEW

ASSEMBLED BY :	DATE :
CHECKED BY :	DATE :
DRAWN BY : CCJ 12/99	
CHECKED BY : RWW 03/00	

REVISIONS						SHEET NO.
NO.	BY:	DATE:	NO.	BY:	DATE:	
1			3			TOTAL SHEETS
2			4			

STD. NO. CW7506