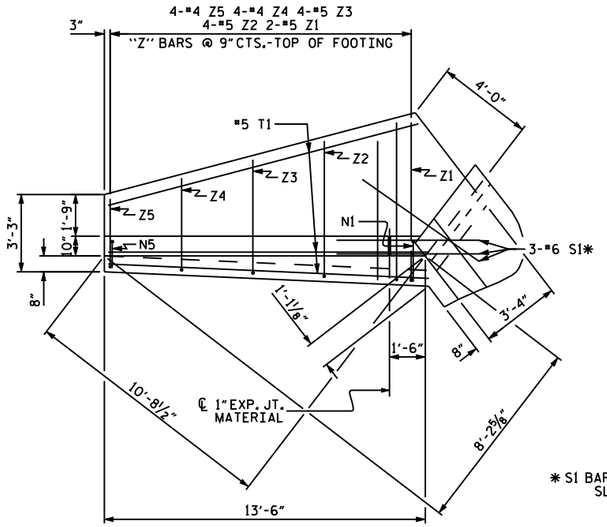

PLAN W2

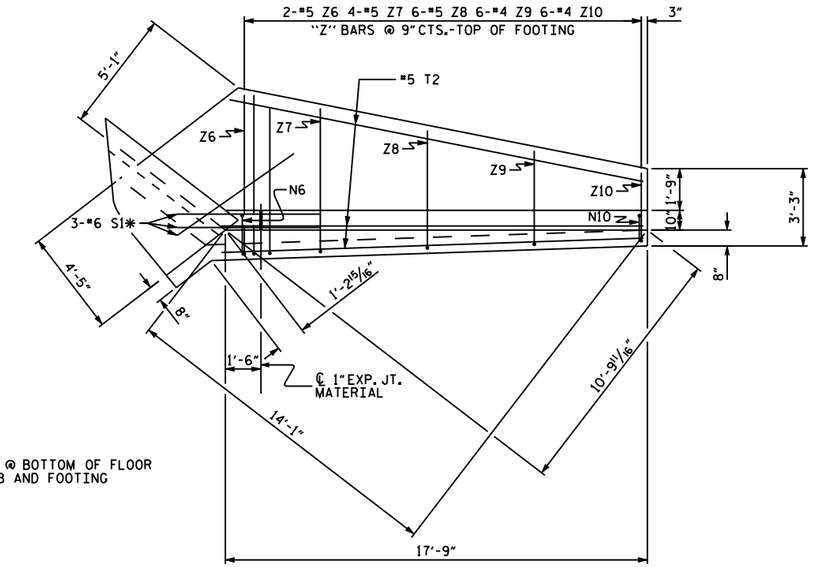

PLAN W1

* S1 BARS @ BOTTOM OF FLOOR SLAB AND FOOTING

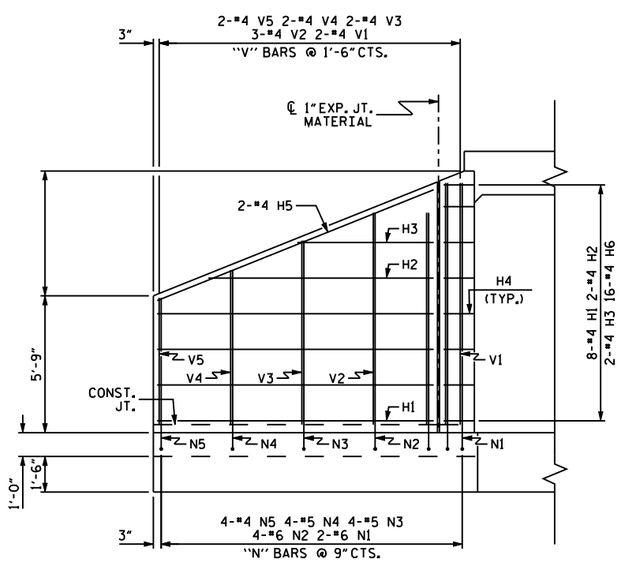

ELEVATION W2

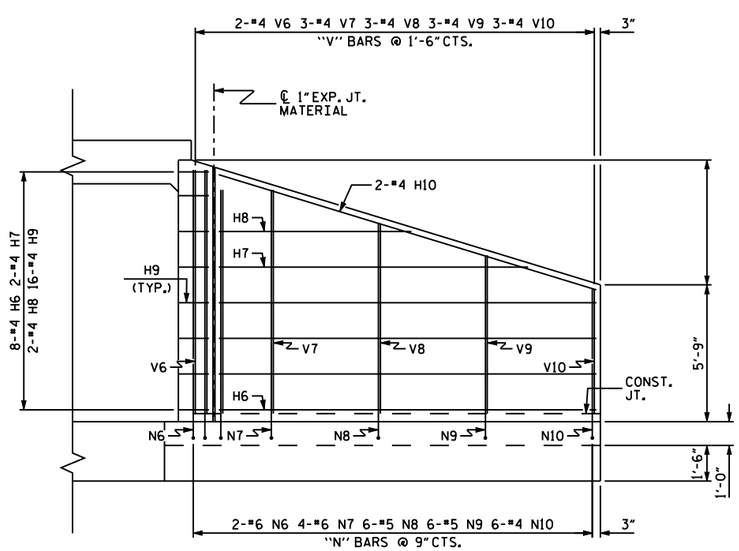

ELEVATION W1

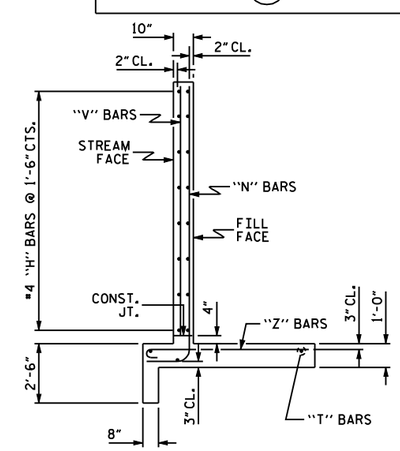

TYPICAL WING SECTION

BAR TYPES

ALL BAR DIMENSIONS ARE OUT TO OUT.

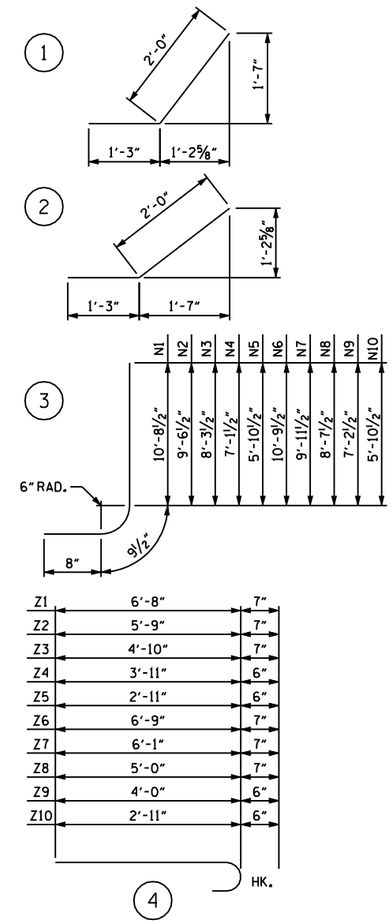

BILL OF MATERIAL

BAR	NO.	SIZE	TYPE	LENGTH	WEIGHT
H1	16	#4	STR	11'-7"	124
H2	4	#4	STR	9'-5"	25
H3	4	#4	STR	5'-8"	15
H4	32	#4	1	3'-3"	69
H5	4	#4	STR	12'-6"	33
H6	16	#4	STR	15'-10"	169
H7	4	#4	STR	13'-0"	35
H8	4	#4	STR	8'-1"	22
H9	32	#4	2	3'-3"	69
H10	4	#4	STR	16'-7"	44
N1	4	#6	3	12'-2"	73
N2	8	#6	3	11'-0"	132
N3	8	#5	3	9'-9"	81
N4	8	#5	3	8'-7"	72
N5	8	#4	3	7'-4"	39
N6	4	#6	3	12'-3"	74
N7	8	#6	3	11'-5"	137
N8	12	#5	3	10'-1"	126
N9	12	#5	3	8'-8"	108
N10	12	#4	3	7'-4"	59
S1	12	#6	STR	6'-0"	108
T1	6	#5	STR	13'-6"	84
T2	6	#5	STR	17'-9"	111
V1	4	#4	STR	10'-2"	27
V2	6	#4	STR	8'-11"	36
V3	4	#4	STR	7'-9"	21
V4	4	#4	STR	6'-6"	17
V5	4	#4	STR	5'-4"	14
V6	4	#4	STR	10'-3"	27
V7	6	#4	STR	9'-5"	38
V8	6	#4	STR	8'-0"	32
V9	6	#4	STR	6'-8"	27
V10	6	#4	STR	5'-3"	21
Z1	4	#5	4	7'-3"	30
Z2	8	#5	4	6'-4"	53
Z3	8	#5	4	5'-5"	45
Z4	8	#4	4	4'-5"	24
Z5	8	#4	4	3'-5"	18
Z6	4	#5	4	7'-4"	31
Z7	8	#5	4	6'-8"	56
Z8	12	#5	4	5'-7"	70
Z9	12	#4	4	4'-6"	36
Z10	12	#4	4	3'-5"	27

REINFORCING STEEL FOR 4 WINGS 2459 LBS

CLASS A CONCRETE
4 WINGS 32.8 CY
2 HEADWALLS CY
2 END CURTAIN WALLS CY
TOTAL CY

PROJECT NO. _____

_____ COUNTY

STATION: _____

STATE OF NORTH CAROLINA
DEPARTMENT OF TRANSPORTATION
RALEIGH

STANDARD WINGS FOR CONCRETE BOX CULVERT

H = 10'-0" SLOPE = 2:1
75° OR 105° SKEW

REVISIONS						SHEET NO.
NO.	BY:	DATE:	NO.	BY:	DATE:	
1			3			TOTAL SHEETS
2			4			

ASSEMBLED BY : DATE :
CHECKED BY : DATE :

DRAWN BY : CCJ 01/00
CHECKED BY : RWW 03/00

STD. NO. CW7510.STD