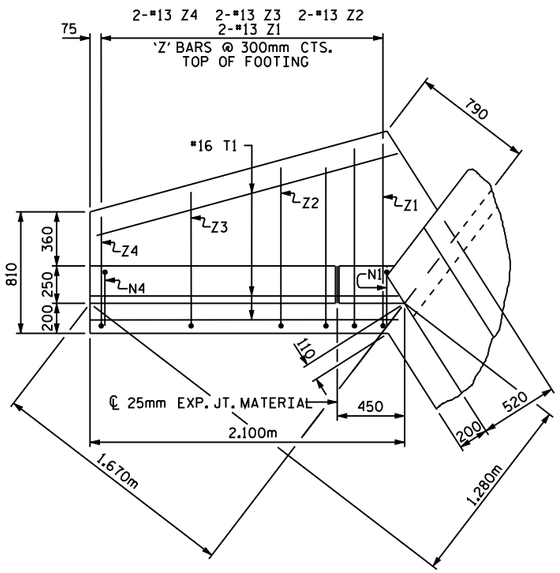

PLAN W2

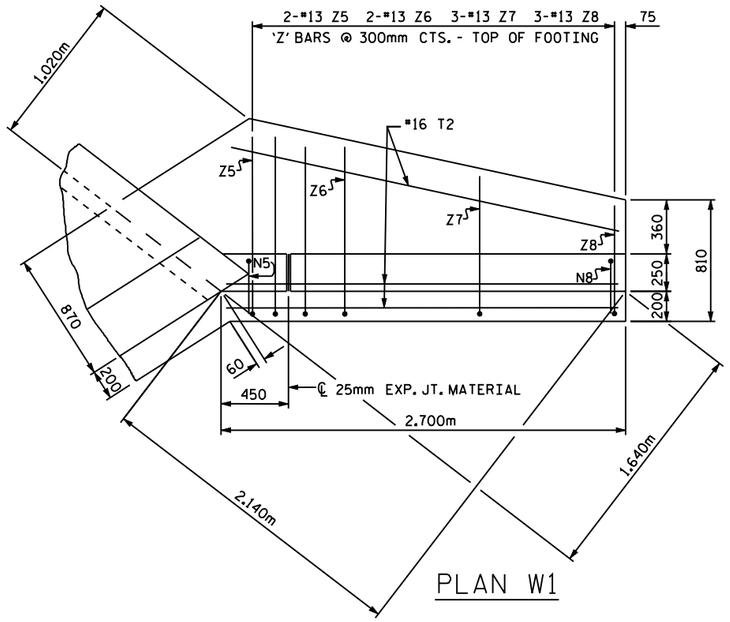

PLAN W1

BAR TYPES

ALL BAR DIMENSIONS ARE OUT TO OUT.

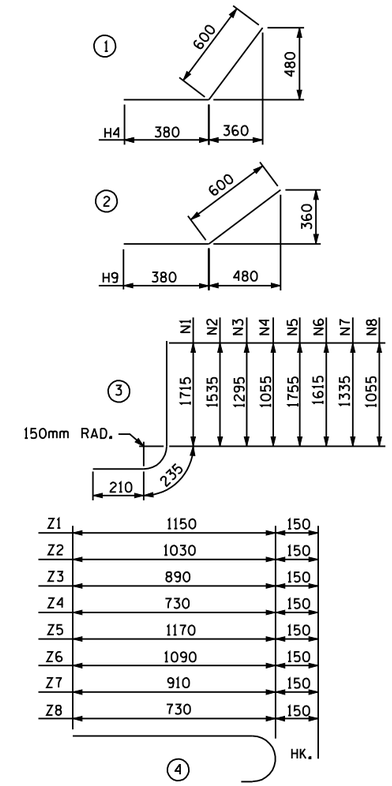

BILL OF MATERIAL

BAR	NO.	SIZE	TYPE	LENGTH	WEIGHT
H1	12	13	STR	1540	18
H2	4	13	STR	1340	5
H3	4	13	STR	600	2
H4	24	13	1	980	23
H5	4	13	STR	1640	7
H6	12	13	STR	2140	26
H7	4	13	STR	1900	8
H8	4	13	STR	940	4
H9	24	13	2	980	23
H10	4	13	STR	2220	9
N1	4	13	3	2160	9
N2	4	13	3	1980	8
N3	4	13	3	1740	7
N4	4	13	3	1500	6
N5	4	13	3	2200	9
N6	4	13	3	2060	8
N7	6	13	3	1780	11
N8	6	13	3	1500	9
T1	6	16	STR	2100	20
T2	6	16	STR	2700	25
V1	4	13	STR	1540	6
V2	4	13	STR	1360	5
V3	4	13	STR	1120	4
V4	4	13	STR	880	3
V5	4	13	STR	1580	6
V6	4	13	STR	1440	6
V7	6	13	STR	1160	7
V8	6	13	STR	880	5
Z1	4	13	4	1300	5
Z2	4	13	4	1180	5
Z3	4	13	4	1040	4
Z4	4	13	4	880	3
Z5	4	13	4	1320	5
Z6	4	13	4	1240	5
Z7	6	13	4	1060	6
Z8	6	13	4	880	5

REINFORCING STEEL
FOR 4 WING WALLS 317 kg

CLASS A CONCRETE
4 WINGS 7.5 m^3
2 HEADWALLS _____ m^3
2 END CURTAIN WALLS _____ m^3
TOTAL _____ m^3

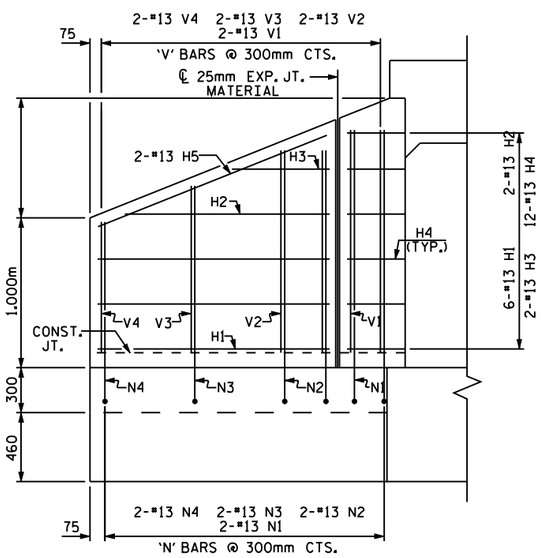

ELEVATION W2

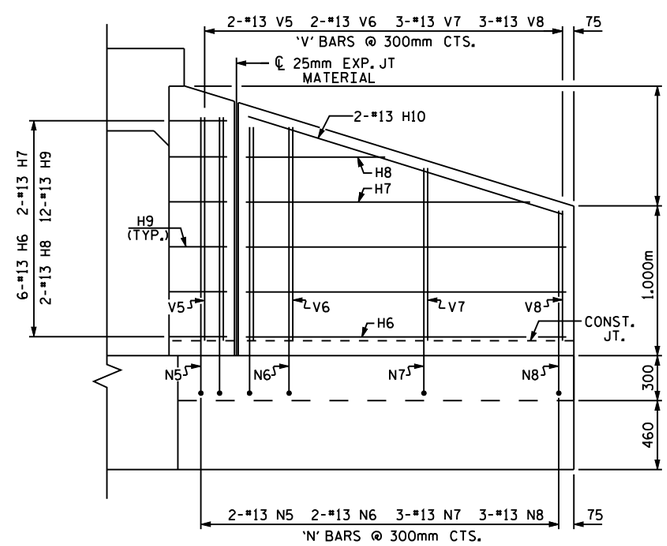

ELEVATION W1

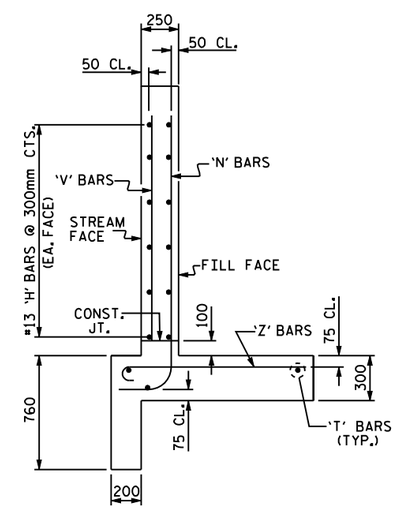

TYPICAL WING SECTION

PROJECT NO. _____

_____ COUNTY

STATION: _____

SHEET OF

STATE OF NORTH CAROLINA
DEPARTMENT OF TRANSPORTATION
RALEIGH

STANDARD WINGS
FOR
CONCRETE BOX CULVERT
H=1.500m SLOPE=2:1
75° OR 105° SKEW

REVISIONS						SHEET NO.
NO.	BY:	DATE:	NO.	BY:	DATE:	
1			3			TOTAL SHEETS
2			4			

ASSEMBLED BY : DATE :
CHECKED BY : DATE :

DRAWN BY : JLR 6/97
CHECKED BY : VAP 12/97

FOR WING ORIENTATION, SEE BARREL STANDARD SHEET.

STD. NO. CW7515