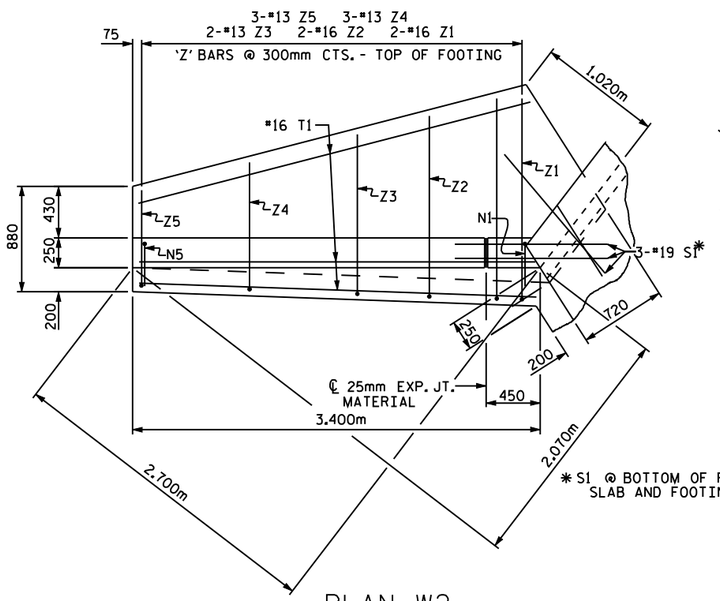

PLAN W2

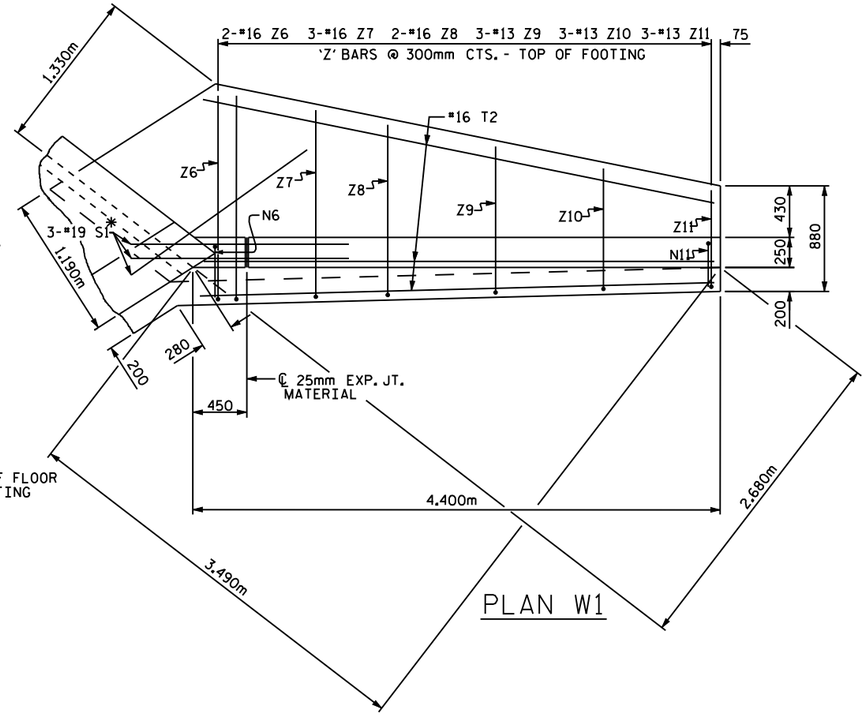

PLAN W1

BAR TYPES

ALL BAR DIMENSIONS ARE OUT TO OUT.

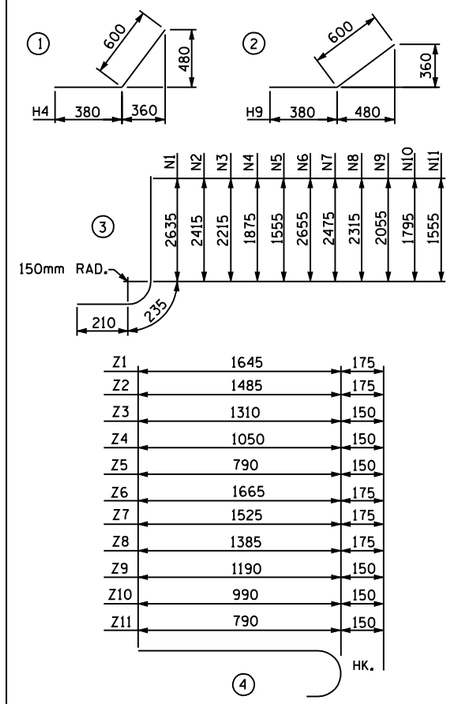

BILL OF MATERIAL

BAR	NO.	SIZE	TYPE	LENGTH	WEIGHT
H1	12	13	STR	2840	34
H2	4	13	STR	2760	11
H3	4	13	STR	1520	6
H4	24	13	1	980	23
H5	4	13	STR	3000	12
H6	12	13	STR	3840	46
H7	4	13	STR	3760	15
H8	4	13	STR	2160	9
H9	24	13	2	980	23
H10	4	13	STR	3980	16
N1	4	16	3	3080	19
N2	4	16	3	2860	18
N3	4	13	3	2660	11
N4	6	13	3	2320	14
N5	6	13	3	2000	12
N6	4	16	3	3100	19
N7	6	16	3	2920	27
N8	4	13	3	2760	11
N9	6	13	3	2500	15
N10	6	13	3	2240	13
N11	6	13	3	2000	12
S1	12	19	STR	1800	48
T1	6	16	STR	3400	32
T2	6	16	STR	4400	41
V1	4	13	STR	2460	10
V2	4	13	STR	2240	9
V3	4	13	STR	2040	8
V4	6	13	STR	1700	10
V5	6	13	STR	1380	8
V6	4	13	STR	2480	10
V7	6	13	STR	2300	14
V8	4	13	STR	2140	9
V9	6	13	STR	1880	11
V10	6	13	STR	1620	10
V11	6	13	STR	1380	8
Z1	4	16	4	1820	11
Z2	4	16	4	1660	10
Z3	4	13	4	1460	6
Z4	6	13	4	1200	7
Z5	6	13	4	940	6
Z6	4	16	4	1840	11
Z7	6	16	4	1700	16
Z8	4	16	4	1560	10
Z9	6	13	4	1340	8
Z10	6	13	4	1140	7
Z11	6	13	4	940	6

REINFORCING STEEL FOR 4 WINGS 692 kg

CLASS A CONCRETE

4 WINGS 16.6 m^3
2 HEADWALLS _____ m^3
2 END CURTAIN WALLS _____ m^3
TOTAL _____ m^3

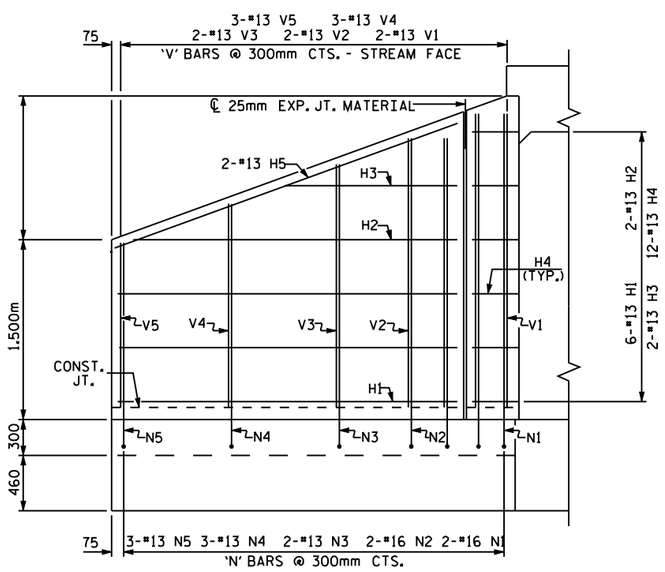

ELEVATION W2

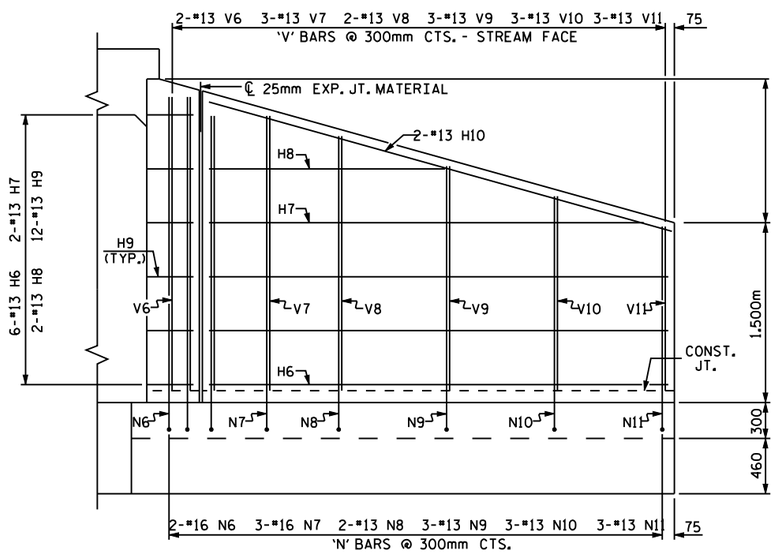

ELEVATION W1

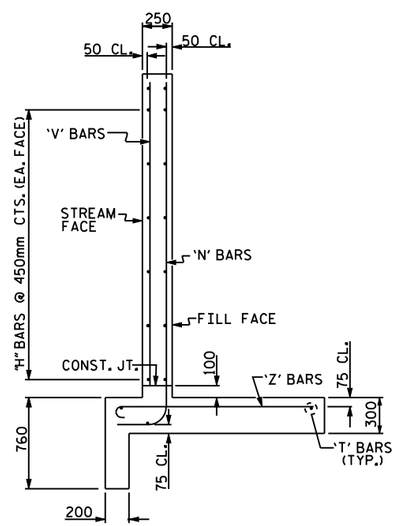

TYPICAL WING SECTION

FOR WING ORIENTATION, SEE BARREL STANDARD SHEET.

PROJECT NO. _____

_____ COUNTY

STATION: _____

SHEET OF

STATE OF NORTH CAROLINA
DEPARTMENT OF TRANSPORTATION
RALEIGH

STANDARD WINGS FOR CONCRETE BOX CULVERT

H = 2.400m SLOPE = 2 : 1

75° OR 105° SKEW

REVISIONS						SHEET NO.
NO.	BY:	DATE:	NO.	BY:	DATE:	
1			3			TOTAL SHEETS
2			4			

ASSEMBLED BY :	DATE :
CHECKED BY :	DATE :
DRAWN BY : FPP 06/97	
CHECKED BY : VAP 08/97	

STD. NO. CW7524