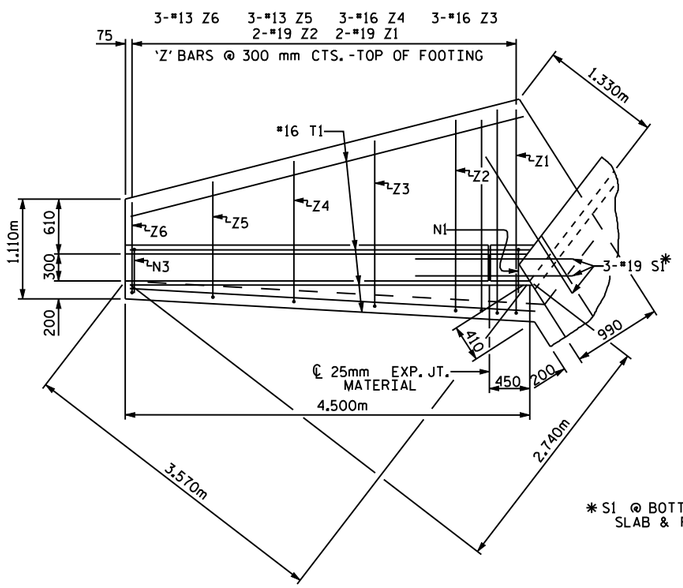

PLAN W2

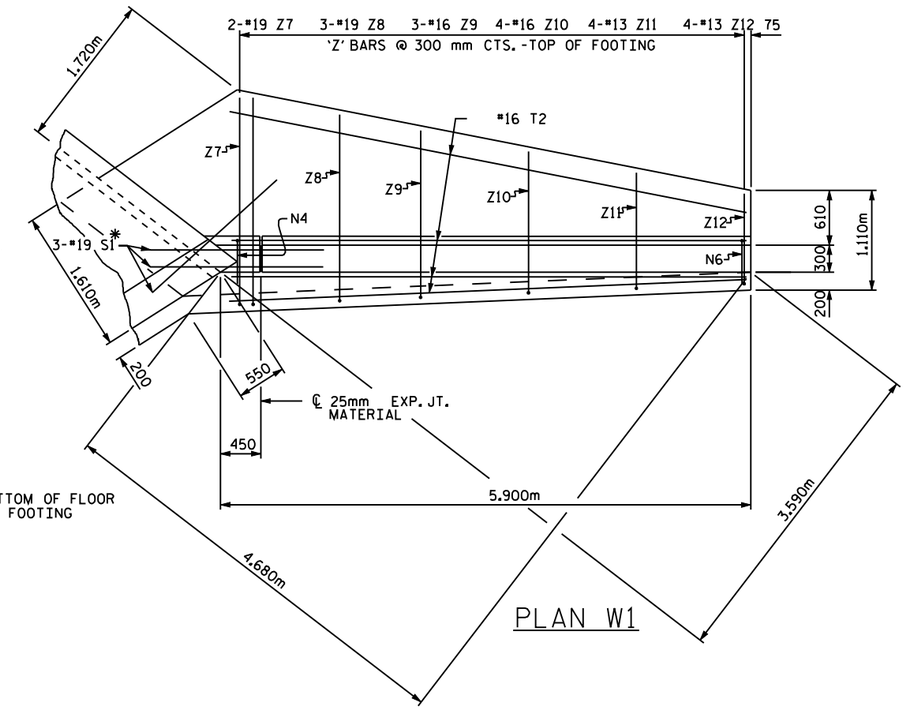

PLAN W1

* S1 @ BOTTOM OF FLOOR SLAB & FOOTING

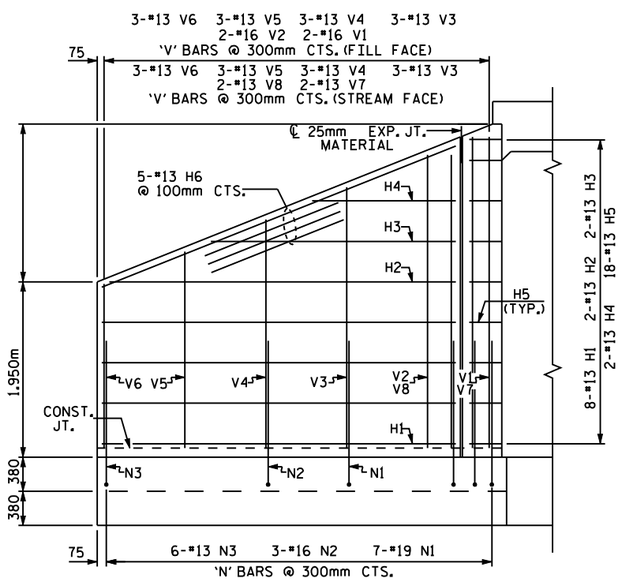

ELEVATION W2

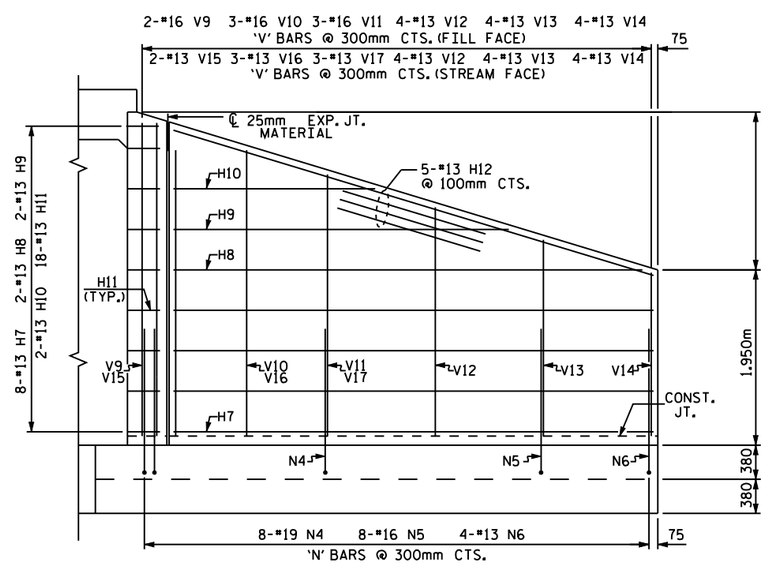

ELEVATION W1

FOR WING ORIENTATION, SEE BARREL STANDARD SHEET.

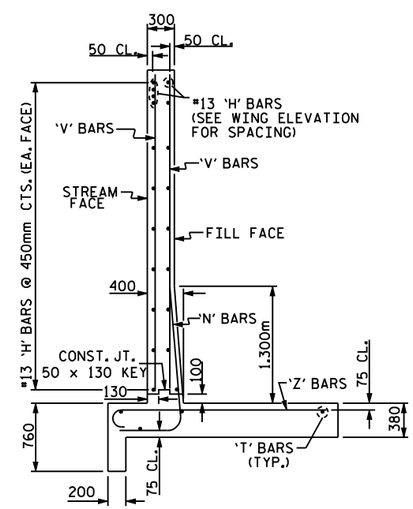

TYPICAL WING SECTION

BAR TYPES

ALL BAR DIMENSIONS ARE OUT TO OUT.

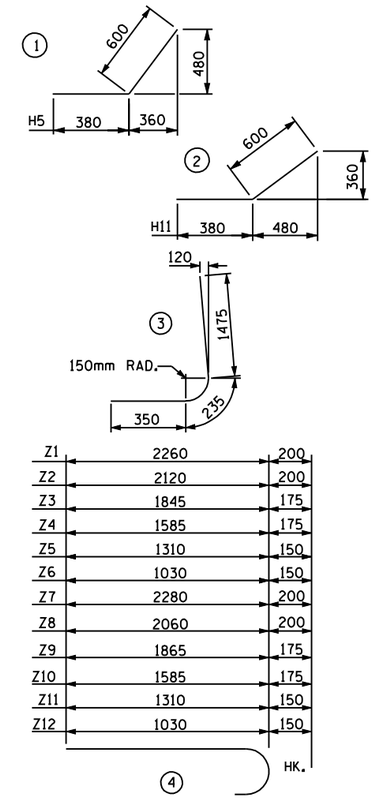

BILL OF MATERIAL

BAR	NO.	SIZE	TYPE	LENGTH	WEIGHT
H1	16	13	STR	3940	63
H2	4	13	STR	3860	15
H3	4	13	STR	2720	11
H4	4	13	STR	1600	6
H5	36	13	1	980	35
H6	10	13	STR	4220	42
H7	16	13	STR	5340	85
H8	4	13	STR	5260	21
H9	4	13	STR	3780	15
H10	4	13	STR	2300	9
H11	36	13	2	980	35
H12	10	13	STR	5560	55
N1	14	19	3	2060	64
N2	6	16	3	2060	19
N3	12	13	3	2060	25
N4	16	19	3	2060	74
N5	16	16	3	2060	51
N6	8	13	3	2060	16
S1	12	19	STR	1800	48
T1	8	16	STR	4500	56
T2	8	16	STR	5900	73
V1	4	16	STR	3440	21
V2	4	16	STR	3260	20
V3	12	13	STR	2900	34
V4	12	13	STR	2540	30
V5	12	13	STR	2180	26
V6	12	13	STR	1820	22
V7	4	13	STR	3440	14
V8	4	13	STR	3260	13
V9	4	16	STR	3460	21
V10	6	16	STR	3180	30
V11	6	16	STR	2920	27
V12	16	13	STR	2540	40
V13	16	13	STR	2180	34
V14	16	13	STR	1820	28
V15	4	13	STR	3460	14
V16	6	13	STR	3180	19
V17	6	13	STR	2920	17
Z1	4	19	4	2460	22
Z2	4	19	4	2320	21
Z3	6	16	4	2020	19
Z4	6	16	4	1760	16
Z5	6	13	4	1460	9
Z6	6	13	4	1180	7
Z7	4	19	4	2480	22
Z8	6	19	4	2260	30
Z9	6	16	4	2040	19
Z10	8	16	4	1760	22
Z11	8	13	4	1460	12
Z12	8	13	4	1180	9

REINFORCING STEEL FOR 4 WINGS 1436 kg

CLASS A CONCRETE

4 WINGS _____ m^3
2 HEADWALLS _____ m^3
2 END CURTAIN WALLS _____ m^3
TOTAL _____ m^3

PROJECT NO. _____
_____ COUNTY
STATION: _____
SHEET OF

STATE OF NORTH CAROLINA
DEPARTMENT OF TRANSPORTATION
RALEIGH

STANDARD WINGS FOR CONCRETE BOX CULVERT

H = 3.400m SLOPE = 2 : 1
75° OR 105° SKEW

ASSEMBLED BY :	DATE :
CHECKED BY :	DATE :
DRAWN BY : FPP 06/97	
CHECKED BY : VAP 07/97	

REVISIONS						SHEET NO.
NO.	BY:	DATE:	NO.	BY:	DATE:	
1			3			TOTAL SHEETS
2			4			

STD. NO. CW7534