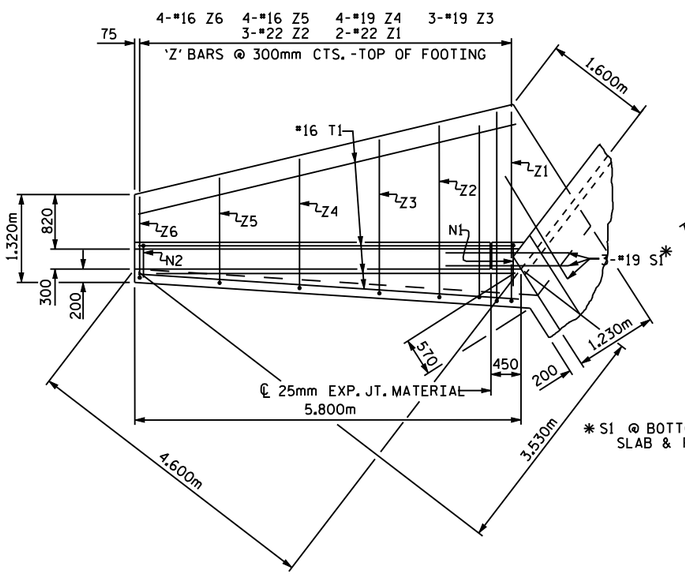

PLAN W2

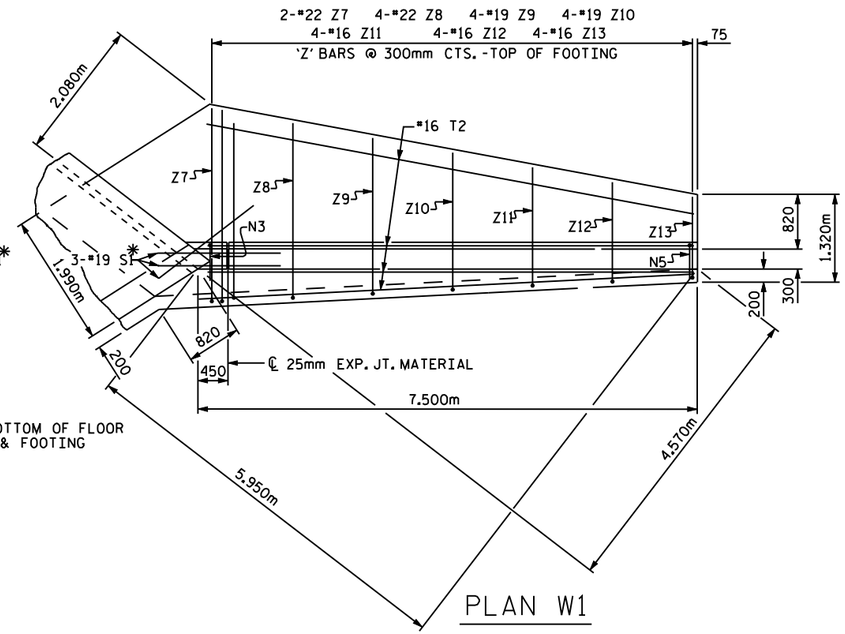

PLAN W1

* S1 @ BOTTOM OF FLOOR SLAB & FOOTING

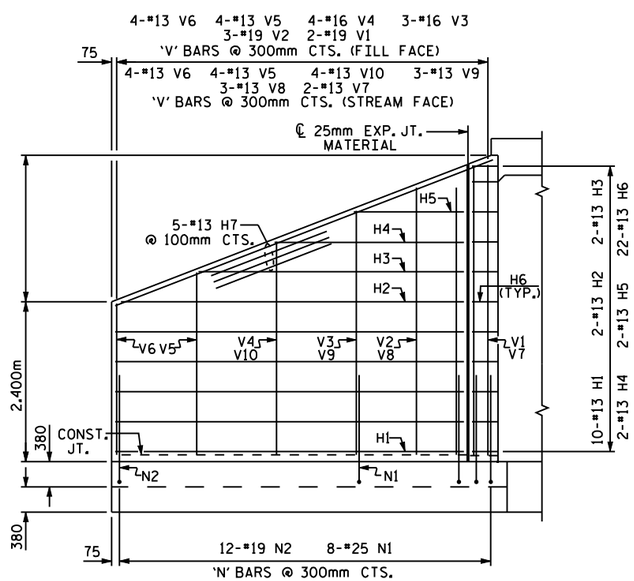

ELEVATION W2

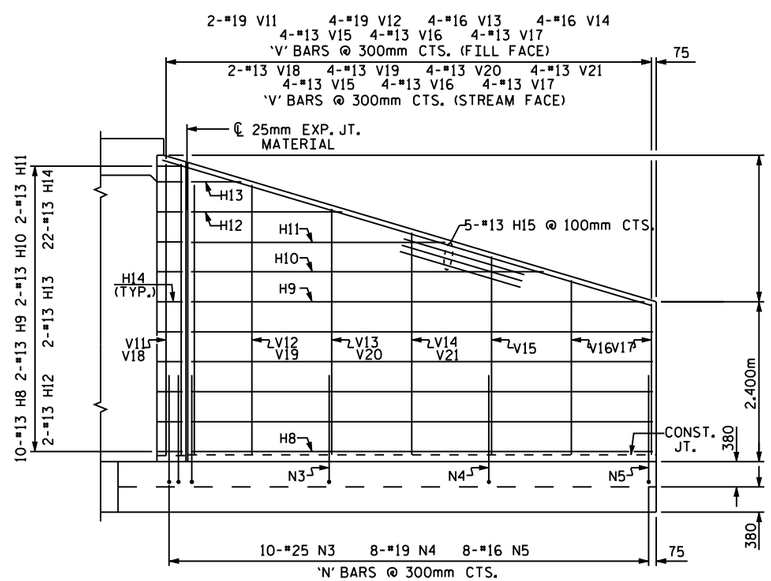

ELEVATION W1

FOR WING ORIENTATION, SEE BARREL STANDARD SHEET.

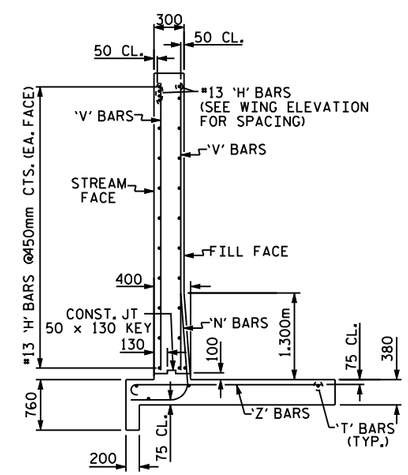

TYPICAL WING SECTION

BAR TYPES

ALL BAR DIMENSIONS ARE OUT TO OUT.

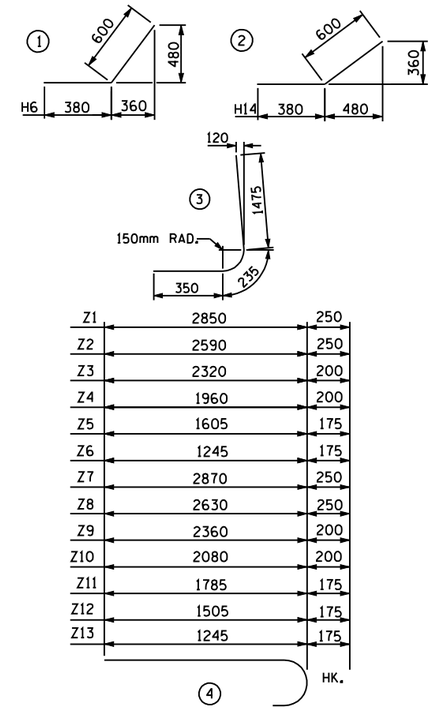

BILL OF MATERIAL

BAR	NO.	SIZE	TYPE	LENGTH	WEIGHT
H1	20	13	STR	5240	104
H2	4	13	STR	5160	21
H3	4	13	STR	4000	16
H4	4	13	STR	2820	11
H5	4	13	STR	1660	7
H6	44	13	1	980	43
H7	10	13	STR	5600	56
H8	20	13	STR	6940	138
H9	4	13	STR	6860	27
H10	4	13	STR	5360	21
H11	4	13	STR	3840	15
H12	4	13	STR	2340	9
H13	4	13	STR	840	3
H14	44	13	2	980	43
H15	10	13	STR	7220	72
N1	16	25	3	2060	131
N2	24	19	3	2060	110
N3	20	25	3	2060	164
N4	16	19	3	2060	74
N5	16	16	3	2060	51
S1	12	19	STR	1800	48
T1	8	16	STR	5800	72
T2	8	16	STR	7500	93
V1	4	19	STR	4340	39
V2	6	19	STR	4020	54
V3	6	16	STR	3660	34
V4	8	16	STR	3200	40
V5	16	13	STR	2740	44
V6	16	13	STR	2280	36
V7	4	13	STR	4340	17
V8	6	13	STR	4020	24
V9	6	13	STR	3660	22
V10	8	13	STR	3200	25
V11	4	19	STR	4380	39
V12	8	19	STR	4060	73
V13	8	16	STR	3700	46
V14	8	16	STR	3340	41
V15	16	13	STR	2980	47
V16	16	13	STR	2620	42
V17	16	13	STR	2280	36
V18	4	13	STR	4380	17
V19	8	13	STR	4060	32
V20	8	13	STR	3700	29
V21	8	13	STR	3340	27
Z1	4	22	4	3100	38
Z2	6	22	4	2840	52
Z3	6	19	4	2520	34
Z4	8	19	4	2160	39
Z5	8	16	4	1780	22
Z6	8	16	4	1420	18
Z7	4	22	4	3120	38
Z8	8	22	4	2880	70
Z9	8	19	4	2560	46
Z10	8	19	4	2280	41
Z11	8	16	4	1960	24
Z12	8	16	4	1680	21
Z13	8	16	4	1420	18

REINFORCING STEEL FOR 4 WINGS 2554 kg

CLASS A CONCRETE

4 WINGS 56.1 m^3

2 HEADWALLS _____ m^3

2 END CURTAIN WALLS _____ m^3

TOTAL _____ m^3

PROJECT NO. _____

_____ COUNTY

STATION: _____

SHEET OF

STATE OF NORTH CAROLINA
DEPARTMENT OF TRANSPORTATION
RALEIGH

STANDARD WINGS FOR CONCRETE BOX CULVERT
H = 4.300m SLOPE = 2:1
75° OR 105° SKEW

REVISIONS						SHEET NO.
NO.	BY:	DATE:	NO.	BY:	DATE:	
1			3			TOTAL SHEETS
2			4			

ASSEMBLED BY : DATE :
CHECKED BY : DATE :

DRAWN BY : FPP 06/97
CHECKED BY : VAP 08/97

STD. NO. CW7543