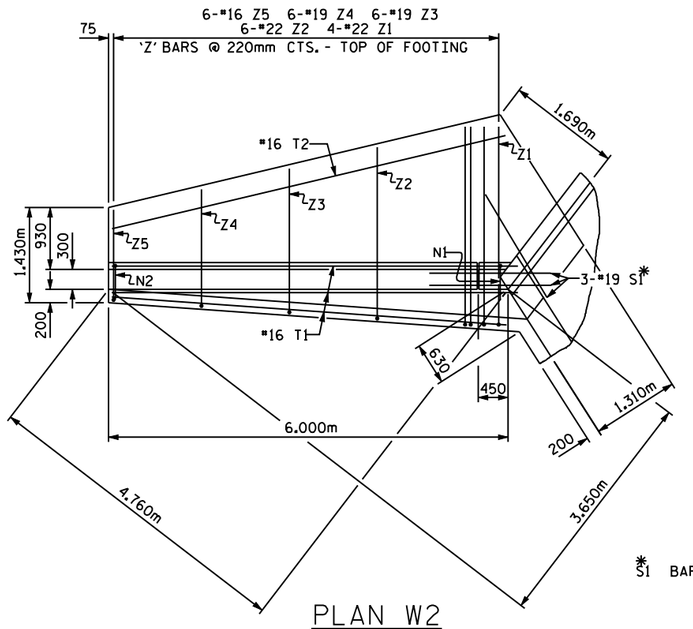

PLAN W2

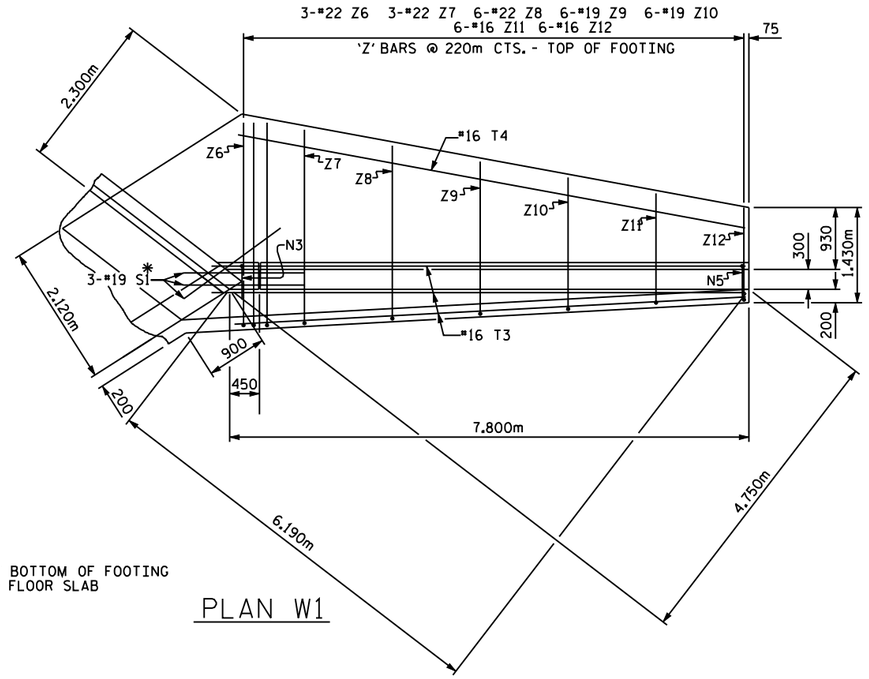

PLAN W1

* S1 BARS AT BOTTOM OF FOOTING AND FLOOR SLAB

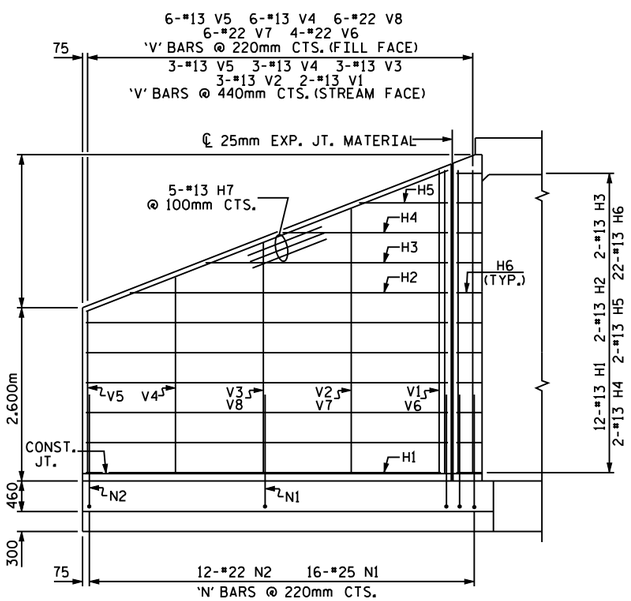

ELEVATION W2

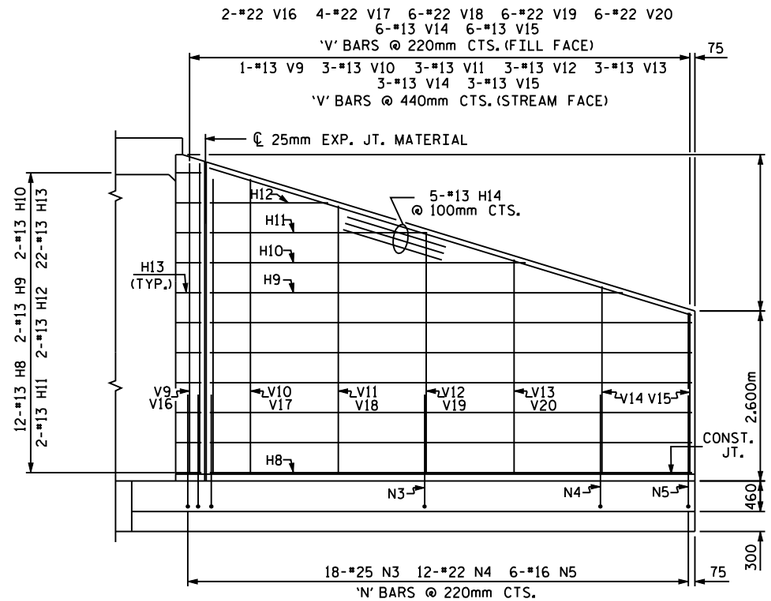

ELEVATION W1

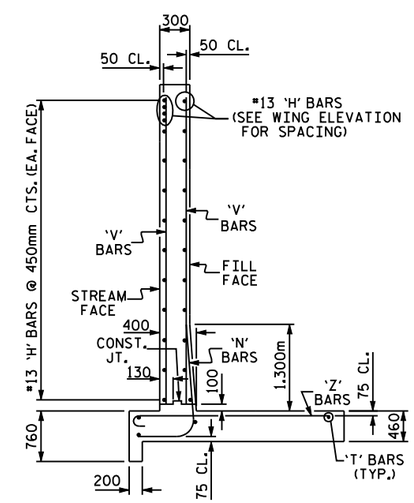

TYPICAL WING SECTION

FOR WING ORIENTATION, SEE BARREL STANDARD SHEET.

BAR TYPES

ALL BAR DIMENSIONS ARE OUT TO OUT.

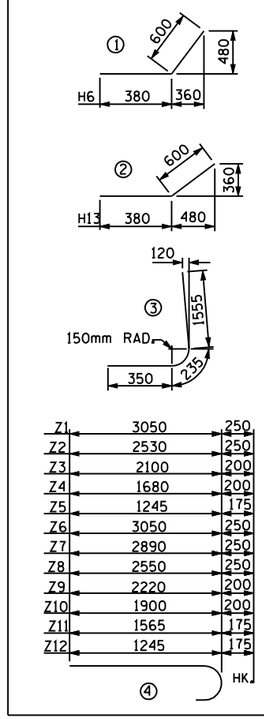

BILL OF MATERIAL

BAR	NO.	SIZE	TYPE	LENGTH	WEIGHT
H1	24	13	STR	5440	130
H2	4	13	STR	4720	19
H3	4	13	STR	3560	14
H4	4	13	STR	2400	10
H5	4	13	STR	1260	5
H6	44	13	1	980	43
H7	10	13	STR	5820	58
H8	24	13	STR	7240	173
H9	4	13	STR	6320	25
H10	4	13	STR	4820	19
H11	4	13	STR	3320	13
H12	4	13	STR	1820	7
H13	44	13	2	980	43
H14	10	13	STR	7540	75
N1	32	25	3	2140	272
N2	24	22	3	2140	156
N3	36	25	3	2140	306
N4	24	22	3	2140	156
N5	12	16	3	2140	40
S1	12	19	STR	1800	48
T1	6	16	STR	6000	56
T2	2	16	STR	3540	11
T3	6	16	STR	7800	73
T4	2	16	STR	3540	11
V1	4	13	STR	4540	18
V2	6	13	STR	4020	24
V3	6	13	STR	3500	21
V4	18	13	STR	3000	54
V5	18	13	STR	2480	45
V6	8	22	STR	4540	110
V7	12	22	STR	4020	147
V8	12	22	STR	3500	128
V9	2	13	STR	4680	9
V10	6	13	STR	4460	27
V11	6	13	STR	4060	24
V12	6	13	STR	3660	22
V13	6	13	STR	3260	19
V14	6	13	STR	2860	17
V15	6	13	STR	2480	15
V16	4	22	STR	4640	57
V17	8	22	STR	4460	109
V18	12	22	STR	4060	148
V19	12	22	STR	3660	134
V20	12	22	STR	3260	119
Z1	8	22	4	3220	78
Z2	12	22	4	2800	102
Z3	12	19	4	2360	63
Z4	12	19	4	1960	53
Z5	12	16	4	1520	28
Z6	6	22	4	3300	60
Z7	6	22	4	3140	57
Z8	12	22	4	2840	104
Z9	12	19	4	2480	67
Z10	12	19	4	2160	58
Z11	12	16	4	1840	34
Z12	12	16	4	1520	28

REINFORCING STEEL FOR 4 WING WALLS 3806 kg

CLASS A CONCRETE
4 WINGS 67.2 m^3
2 HEADWALLS ____ m^3
2 END CURTAIN WALLS ____ m^3
TOTAL ____ m^3

PROJECT NO. ____

____ COUNTY

STATION: ____

SHEET OF

STATE OF NORTH CAROLINA
DEPARTMENT OF TRANSPORTATION
RALEIGH

STANDARD WINGS FOR CONCRETE BOX CULVERT
H=4.600m SLOPE=2:1
75° OR 105° SKEW

REVISIONS						SHEET NO.
NO.	BY:	DATE:	NO.	BY:	DATE:	
1			3			TOTAL SHEETS
2			4			

ASSEMBLED BY : DATE :
CHECKED BY : DATE :
DRAWN BY : JLR 6/97
CHECKED BY : VAP 12/97

STD. NO. CW7546