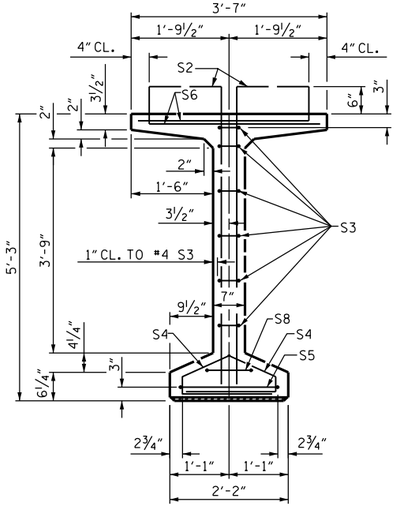


SECTION A-A

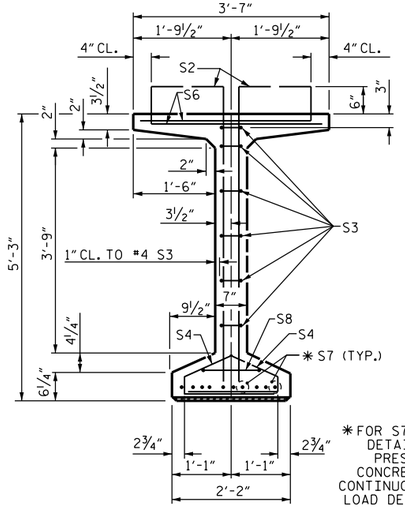


SECTION B-B

* FOR S7 BARS, SEE DETAIL "C" OF PRESTRESSED CONCRETE GIRDER CONTINUOUS FOR LIVE LOAD DETAILS SHEET

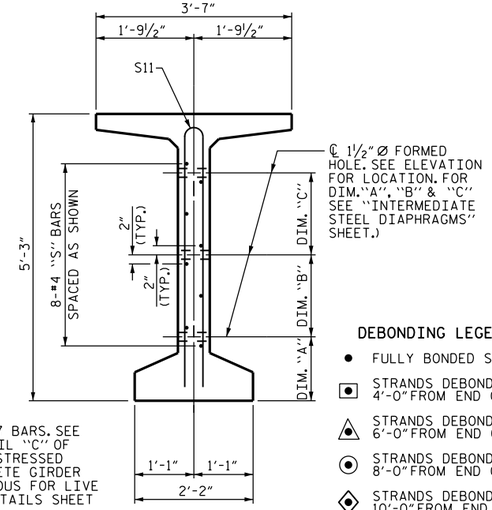


SECTION C-C

(S1, S6 AND S9 BARS NOT SHOWN)

**DEBONDING LEGEND**

- ● FULLY BONDED STRANDS
- STRANDS DEBONDED FOR 4'-0" FROM END OF GIRDER
- STRANDS DEBONDED FOR 6'-0" FROM END OF GIRDER
- STRANDS DEBONDED FOR 8'-0" FROM END OF GIRDER
- STRANDS DEBONDED FOR 10'-0" FROM END OF GIRDER
- STRANDS DEBONDED FOR 12'-0" FROM END OF GIRDER

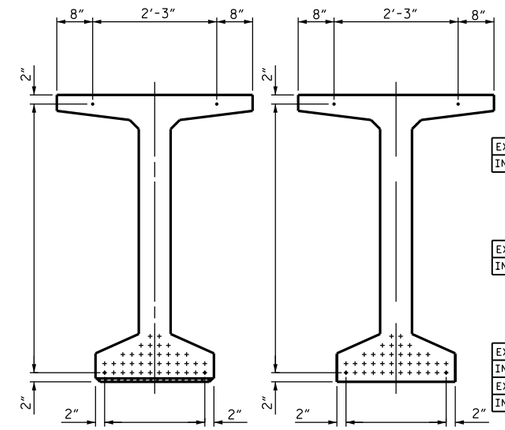


AT END OF GIRDER — AT ℄ OF GIRDER

0.6" Ø LOW RELAXATION STRAND LAYOUT

**0.6" Ø L. R. GRADE 270 STRANDS**

| AREA (SQUARE INCHES) | ULTIMATE STRENGTH (LBS. PER STRAND) | APPLIED PRESTRESS (LBS. PER STRAND) |
|---|---|---|
| 0.217 | 58,600 | 43,950 |

**REINFORCING STEEL FOR ONE GDR**

| | BAR | NUMBER | SIZE | TYPE | LENGTH | WEIGHT |
|---|---|---|---|---|---|---|
| EXTERIOR GDR. | S1 | | #4 | 1 | 6'-1" | |
| INTERIOR GDR. | S1 | | #4 | 1 | 6'-1" | |
| | S2 | 24 | #5 | 1 | 6'-1" | 152 |
| | S3 | 12 | #4 | 2 | 8'-5" | 67 |
| | S4 | 72 | #4 | 3 | 3'-0" | 144 |
| | S5 | 1 | #5 | 2 | 9'-10" | 10 |
| EXTERIOR GDR. | S6 | | #5 | 4 | 4'-4" | |
| INTERIOR GDR. | S6 | | #5 | 4 | 4'-4" | |
| | * S7 | 10 | #5 | STR | 3'-8" | 38 |
| | S8 | 2 | #5 | 2 | 9'-0" | 19 |
| | S9 | | #5 | STR | 3'-3" | |
| | S10 | 1 | #3 | STR | 1'-10" | 1 |
| EXTERIOR GDR. | S11 | | #5 | 5 | 10'-0" | |
| INTERIOR GDR. | S11 | | #5 | 5 | 10'-0" | |
| EXTERIOR GDR. | S12 | | #4 | STR | 8'-0" | |
| INTERIOR GDR. | S | | #4 | STR | | |

* NOTE: S7 BARS SHALL BE BENT BEFORE SHIPMENT. HEAT BENDING SHALL NOT BE ALLOWED.

**BAR TYPES**

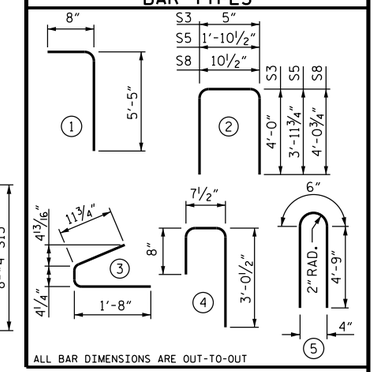


**QUANTITIES FOR ONE GIRDER**

| | REINFORCING STEEL LB. | ---- PSI CONCRETE C.Y. | 0.6" Ø L.R. STRANDS No. |
|---|---|---|---|
| EXTERIOR GIRDER | | | |
| INTERIOR GIRDER | | | |

**GIRDERS REQUIRED**

| NUMBER | LENGTH | TOTAL LENGTH |
|---|---|---|
| | | |
| | | |
| | | |

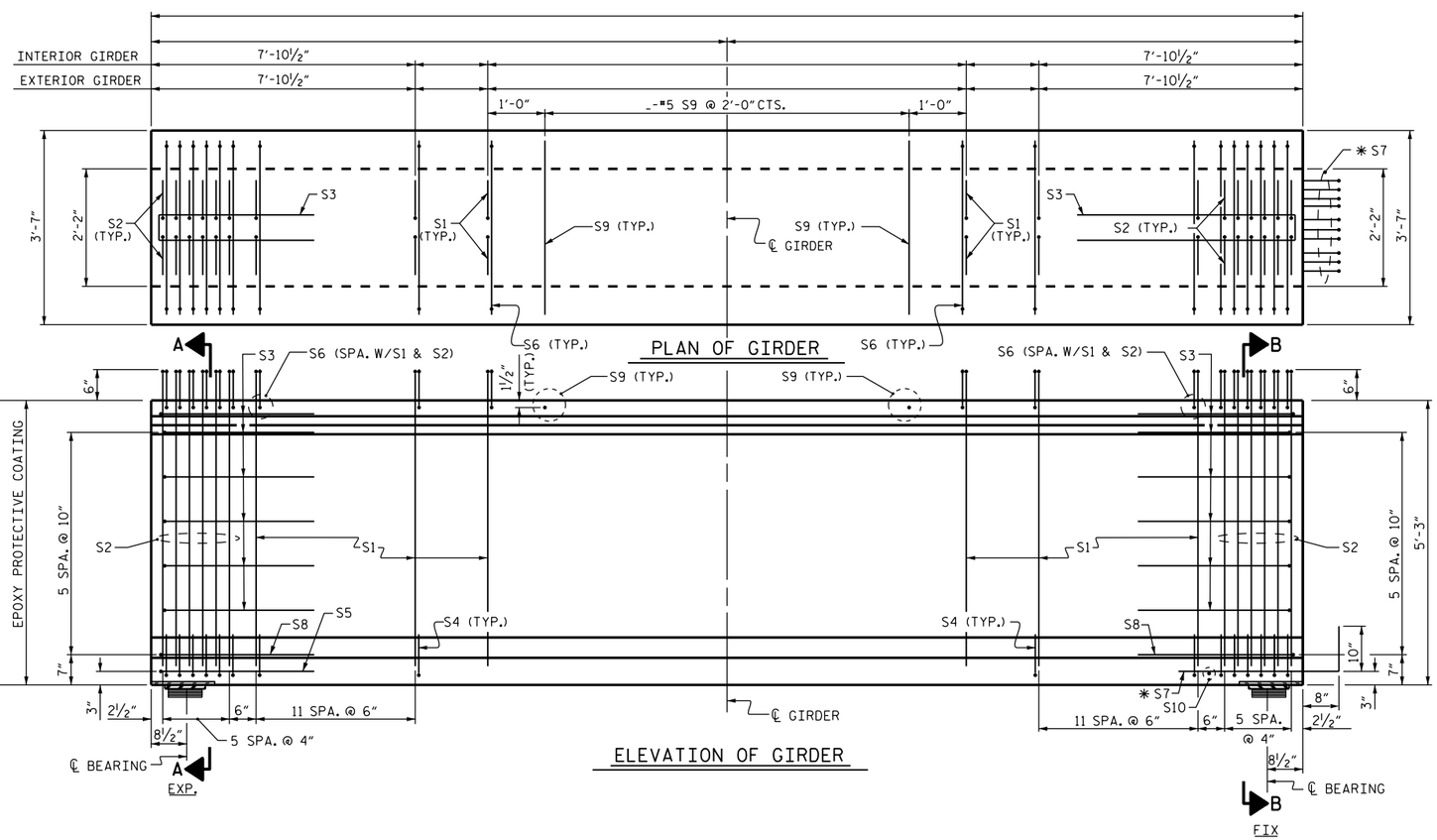


PLAN OF GIRDER

ELEVATION OF GIRDER

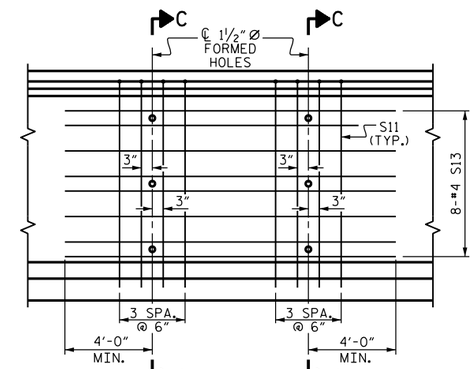


PARTIAL ELEVATION

SHOWING INTERMEDIATE STEEL DIAPHRAGM REINFORCING STEEL FOR GIRDER Nos. _____
( FOR INTERIOR GDRS. WITH SKEW < 70° OR SKEW > 110° )

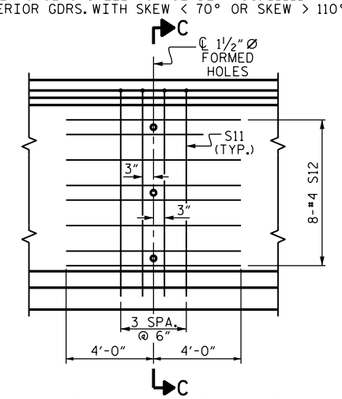


PARTIAL ELEVATION

SHOWING INTERMEDIATE STEEL DIAPHRAGM REINFORCING STEEL FOR GIRDER Nos. _____
(FOR ALL EXTERIOR GIRDERS AND INTERIOR GIRDERS WITH 70° ≤ SKEW ≤ 110°)

PROJECT NO. _____

_____ COUNTY

STATION: _____

SHEET OF

STATE OF NORTH CAROLINA
**DEPARTMENT OF TRANSPORTATION**
RALEIGH

STANDARD

**63" PRESTRESSED CONCRETE MODIFIED BULB TEE CONTINUOUS FOR LIVE LOAD**

| REVISIONS | | | | | | SHEET NO. |
|---|---|---|---|---|---|---|
| NO. | BY: | DATE: | NO. | BY: | DATE: | |
| 1 | | | 3 | | | TOTAL SHEETS |
| 2 | | | 4 | | | |

| | |
|---|---|
| ASSEMBLED BY : | DATE : |
| CHECKED BY : | DATE : |
| DRAWN BY : EEM 2/6/97 | REV. 6/13 MAA/GM |
| CHECKED BY : VAP 2/6/97 | REV. 1/15 MAA/TMG |
| | REV. 12/17 MAA/THC |

DOCUMENT NOT CONSIDERED FINAL UNLESS ALL SIGNATURES COMPLETED

STD. NO. PCG7