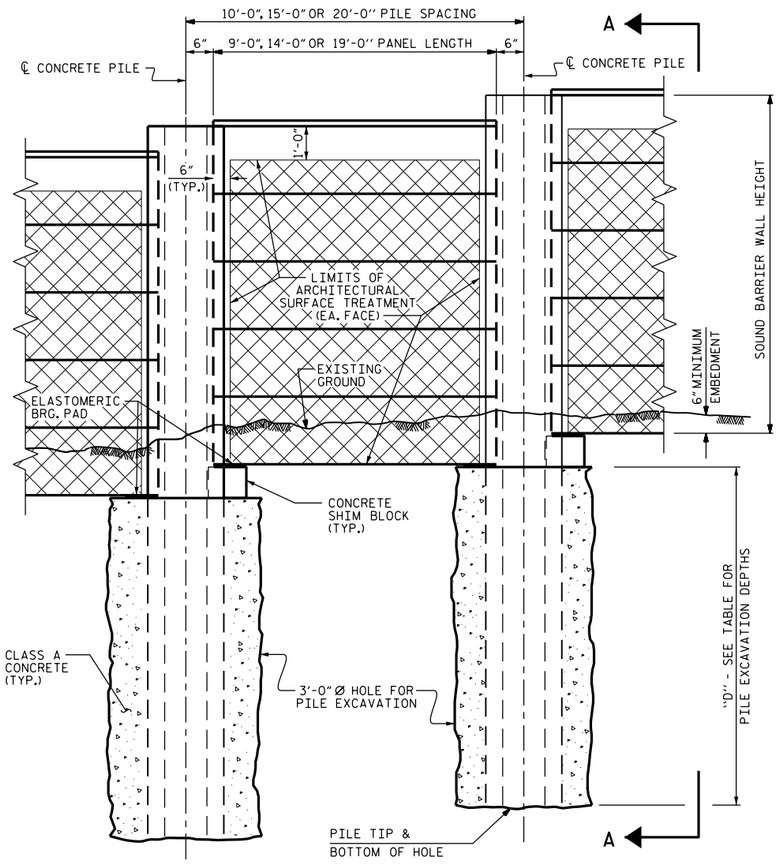

ELEVATION

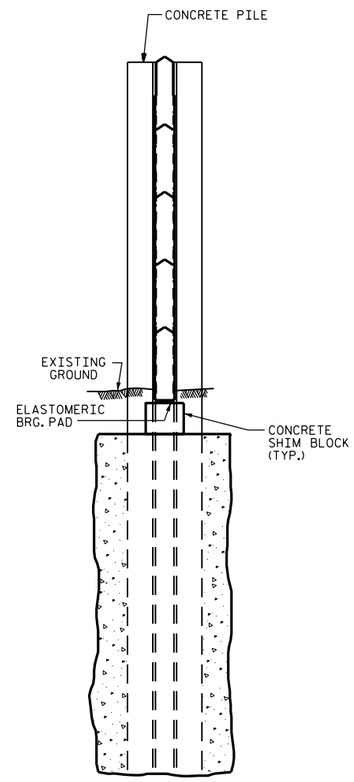

SECTION A-A

PILE EXCAVATION DEPTHS "D"

WALL #	FROM : STA. TO : STA.			
3'-0" Ø HOLE	PILE SPACING	WALL HEIGHT		
		H ≤ 15'	15' < H ≤ 20'	20' < H ≤ 25'
	10'-0"	-	-	-
	15'-0"	-	-	-
	20'-0"	-	-	-
WALL #	FROM : STA. TO : STA.			
3'-0" Ø HOLE	PILE SPACING	WALL HEIGHT		
		H ≤ 15'	15' < H ≤ 20'	20' < H ≤ 25'
	10'-0"	-	-	-
	15'-0"	-	-	-
	20'-0"	-	-	-
WALL #	FROM : STA. TO : STA.			
3'-0" Ø HOLE	PILE SPACING	WALL HEIGHT		
		H ≤ 15'	15' < H ≤ 20'	20' < H ≤ 25'
	10'-0"	-	-	-
	15'-0"	-	-	-
	20'-0"	-	-	-

NOTES

FOR SOUND BARRIER WALL, SEE SPECIAL PROVISIONS.

CONSTRUCT SOUND BARRIER WALL TO LINES AND GRADES SHOWN ON THE ROADWAY PLANS.

PROVIDE PANELS WITH A FLAT BOTTOM.

VERIFY THE LOCATION OF UNDERGROUND UTILITIES BEFORE DRILLING HOLES TO ENSURE SUFFICIENT CLEARANCE IS AVAILABLE.

ADJUST PILE EXCAVATION ELEVATIONS TO MAINTAIN 6" MINIMUM EMBEDMENT OF THE BOTTOM PANEL.

USE CLASS AA FOR PANELS AND CLASS A CONCRETE PILE EXCAVATION BACKFILL, IN ACCORDANCE WITH ARTICLE 1000-4 OF THE STANDARD SPECIFICATIONS.

AT THE CONTRACTOR'S OPTION, USE 10'-0", 15'-0", OR 20'-0" PILE SPACINGS. STANDARD PRECAST CONCRETE PANELS MAY BE USED WITH THE 10'-0" AND 15'-0" PILE SPACING. FOR 20'-0" PILE SPACING, PANELS DESIGNED AND MANUFACTURED BY A THIRD PARTY VENDER SHALL BE USED.

FOR SOUND BARRIER WALL STATIONS, OFFSETS, AND WALL ENVELOPE, SEE ROADWAY PLANS.

PLACE 1" Ø BACKER RODS FULL HEIGHT ON EACH SIDE OF THE PRECAST PANELS. SET AND SEAL THE BACKER ROD IN PLACE WITH SEALANT THAT CONFORMS WITH ARTICLE 1028-3 OF THE STANDARD SPECIFICATIONS.

FOR SUBMITTAL OF WORKING DRAWINGS, SEE SPECIAL PROVISIONS.

FOR FALSEWORK AND FORMWORK, SEE SPECIAL PROVISIONS.

PILE REINFORCING STEEL
DESIGN WIND PRESSURE = 40 PSF

PILE TYPE I				PILE TYPE III			
PILE SPACING	MAXIMUM WALL HEIGHT (H)	VERTICAL REINFORCING STEEL	TIES	PILE SPACING	MAXIMUM WALL HEIGHT (H)	VERTICAL REINFORCING STEEL	TIES
10'-0"	H ≤ 25'	4 - #8 EA. FACE	#3 @ 1'-4" CTS.	10'-0"	H ≤ 25'	3 - #9 SHORT FACE 4 - #9 LONG FACE	#3 @ 1'-4" CTS.
15'-0"	H ≤ 20'	4 - #8 EA. FACE	#3 @ 1'-4" CTS.	15'-0"	H ≤ 20'	3 - #9 SHORT FACE 4 - #9 LONG FACE	#3 @ 1'-4" CTS.
	20' < H ≤ 25'	4 - #10 EA. FACE	#3 @ 1'-4" CTS.		20' < H ≤ 25'	3 - #11 SHORT FACE 4 - #11 LONG FACE	#3 @ 1'-4" CTS.
20'-0"	H ≤ 20'	4 - #9 EA. FACE	#3 @ 1'-4" CTS.	20'-0"	H ≤ 20'	3 - #10 SHORT FACE 4 - #10 LONG FACE	#3 @ 1'-4" CTS.
	20' < H ≤ 25'	4 - #11 EA. FACE	#3 @ 1'-4" CTS.				

PILE TYPE II				PILE TYPE III ALT.			
PILE SPACING	MAXIMUM WALL HEIGHT (H)	VERTICAL REINFORCING STEEL	TIES	PILE SPACING	MAXIMUM WALL HEIGHT (H)	VERTICAL REINFORCING STEEL	TIES
10'-0"	H ≤ 25'	4 - #6 EA. FACE	#3 @ 1'-4" CTS.	10'-0"	H ≤ 25'	3 - #9 SHORT FACE 4 - #9 LONG FACE	#3 @ 1'-4" CTS.
15'-0"	H ≤ 20'	4 - #6 EA. FACE	#3 @ 1'-4" CTS.	15'-0"	H ≤ 20'	3 - #9 SHORT FACE 4 - #9 LONG FACE	#3 @ 1'-4" CTS.
	20' < H ≤ 25'	4 - #7 EA. FACE	#3 @ 1'-4" CTS.		20' < H ≤ 25'	3 - #11 SHORT FACE 4 - #11 LONG FACE	#3 @ 1'-4" CTS.
20'-0"	H ≤ 20'	4 - #6 EA. FACE	#3 @ 1'-4" CTS.	20'-0"	H ≤ 20'	3 - #10 SHORT FACE 4 - #10 LONG FACE	#3 @ 1'-4" CTS.
	20' < H ≤ 25'	4 - #8 EA. FACE	#3 @ 1'-4" CTS.				

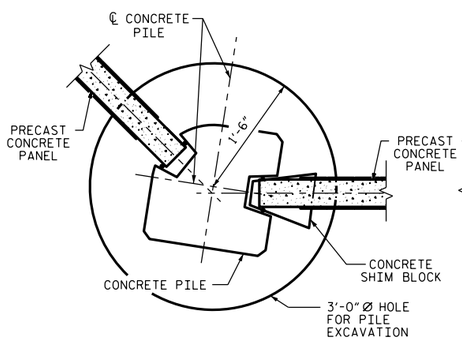

15° TO 45° TURNS
(PILE TYPE III)

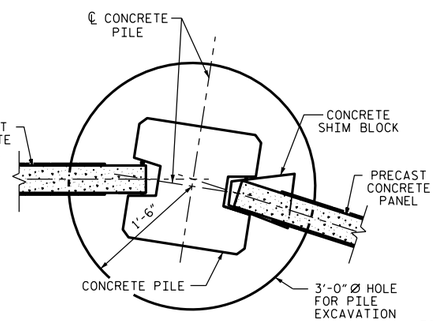

0° TO 15° TURNS
(PILE TYPE I)

TYPICAL WALL TURN DETAILS

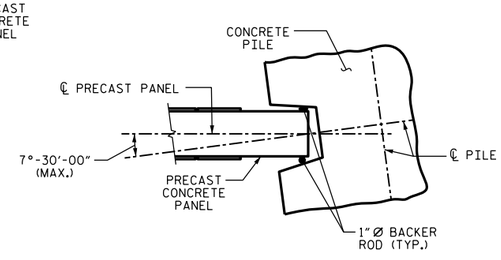

PILE ROTATION LIMIT FOR WALL TURN

(ROTATE THE CONCRETE PILE ±7°-30'-00" TO ACCOMMODATE WALL TURN.)

BILL OF MATERIAL

SOUND BARRIER WALL	S.F.
ARCHITECTURAL SURFACE TREATMENT	S.F.

QUANTITIES PROVIDED ARE APPROXIMATE AND ARE FOR BID PURPOSES ONLY.

ARCHITECTURAL SURFACE TREATMENT

TEXTURE OPTION:	????????
STAIN OPTION:	*****

PROJECT NO. _____

_____ COUNTY

STATION: _____

SHEET OF

STATE OF NORTH CAROLINA
DEPARTMENT OF TRANSPORTATION
RALEIGH

STANDARD

SOUND BARRIER WALL

ASSEMBLED BY :		DATE :
CHECKED BY :		DATE :
DRAWN BY : MAA	6/11	REV. 9/26/14 MAA/TMG
CHECKED BY : GM	6/11	REV. 10/17 MAA/THC
		REV. 5/18 MAA/THC

DOCUMENT NOT CONSIDERED FINAL UNLESS ALL SIGNATURES COMPLETED

REVISIONS						SHEET NO.
NO.	BY:	DATE:	NO.	BY:	DATE:	
1			3			TOTAL SHEETS
2			4			

STD. NO. SBW1