PRESTRESSED CONCRETE BOX BEAM 11-09-04

The prestressed box beam members shall meet the requirements for prestressed concrete members as specified in the Standard Specifications with the following exceptions and additions.

1.0 FABRICATION

Place concrete for box beams in 2 or more horizontal layers. Place and compact each layer before the preceding layer takes initial set so that there is no surface or separation between layers. Should shrinkage or settlement cracks occur, the Engineer reserves the right to require additional layers and/or vibration.

The requirements of the above paragraph may be waived if self-consolidating concrete is used.

When box beams are cast, a positive hold-down system shall be employed to prevent voids from moving. Design the system to be left in place until the concrete has reached the release strength. At least six weeks prior to casting box beams, the Contractor shall submit to the Engineer for review and comment, detailed drawings of the proposed void material and hold-down system. In addition to structural details, location and spacing of the hold-downs shall be indicated. The Contractor shall also submit his proposed method of concrete placement and of consolidating the concrete under the void. Cutting or drilling holes in the void material for the purposes of providing access for consolidating equipment will not be permitted.

Rake the top surface of the box beam section to a depth of 3/8" (10 mm). No surface finish is required for sides and bottom of the box beam sections except the exposed side of the exterior beam section as noted below. Provide a resulting surface finish essentially the same color and surface finish as the surrounding concrete. Fill all voids in the outside face of exterior box beams with a sand-cement or other approved grout. Repair voids greater than ¼" (6 mm) in diameter or depth in other faces of the box beams in a like manner. Where an excessive number of smaller voids exist in any member, the Engineer requires a similar repair.

Provide a ¾" (19 mm) chamfer along the bottom edges on ends and sides of all beam sections, top outside edges of exterior beam sections and acute corners of beam sections. Round the top edges on ends of all sections with a ¼" (6 mm) finishing tool. Provide square corners along top edges on all slab sections along shear keys. Do not chamfer vertical edges at ends of beam sections.

2.0 ALIGNMENT AND DIRECTIONAL TOLERANCES

In order to ensure a good, neat field fit, assemble box beam spans in the yard and have pieces match-marked. Ensure that pieces fit together neatly and in a workman-like manner.

Manufacture the box beams within the tolerances listed in the “Box Beam Tolerances” table and sketches.

3.0 ERECTION

The post tensioning system shall use 0.6" (15mm) diameter strands or 1¼" (32mm) diameter steel bars. Steel bars shall have a minimum yield strength of 150,000 psi (1034.2 MPa), meeting the requirements of ASTM A722. Strands shall be tensioned to 43,950 pounds (195.5 kN) and bars shall be tensioned to 150,000 pounds (667 kN). Strands shall be placed in a non-corrosive 0.6" (15mm) diameter, 1/16" (1.6mm) minimum wall thickness black polyethylene pipe meeting the requirements of ASTM D2239. Similarly, bars shall be placed in a black polyethylene pipe.

When erecting prestressed box beams, place the transverse post tensioning system in the diaphragms, place grout in the grout pockets located at the areas of the post tensioning strands, if provided, and tension to the required force. Grease the bars or strands and place in the polyethylene pipe. Do not apply grease or extend the pipe in the area of the recesses at the ends of the tensioning strands where grout is applied. Tension the bars or strands in the diaphragm nearest mid-span first. Proceed to tension bars or strands in the adjacent diaphragms. Continue the tensioning operation in a symmetric manner along the length of the span. At each diaphragm location, maintain a symmetric tension force between each pair of bars or strands in the diaphragm. After all tensioning in a span is completed and before placing any equipment, material or barrier rail on the span, fill the shear key, dowel holes, and recesses at the ends of the diaphragm with an approved non-metallic, non-shrink grout. Cure for 3 days minimum and until the grout reaches a compressive strength of 3000 psi (20.7 MPa).

After tensioning and curing, obtain approval prior to placing material and equipment on the box beam spans. Support cranes or other equipment exceeding the legal load limit on mats. Submit for review a detailed drawing for the mats that are intended for use on the box beams. Provide a complete description of the equipment that is intended for placement on the mats. Supply and construct mats at no additional cost to the Department.

4.0 PAYMENT

The quantity of prestressed concrete box beams shown on the plans will be paid for at the contract unit price per linear foot for "_____ x _____ Prestressed Concrete Box Beams." This price and payment shall be full compensation for furnishing and placing the prestressed concrete box beams and includes all materials, tools, equipment, labor and incidentals necessary to complete this work.

BOX BEAM TOLERANCES:

a = Length: ± 1 in.

b = Width (overall): ± ¼ in.

c = Depth (overall): ± ¼ in.

d = Variation from specified plan end squareness or skew:

± $^{1}/_{8}$ in. per 12 in. width, ± ½ in. max.

e = Variation from specified elevation end squareness or skew:

± $^{1}/_{8}$ in. per 12 in., ± ½ in. max.

f = Sweep, for member length:

up to 40 ft. ± ¼ in.

40 to 60 ft. ± $^{3}/_{8}$ in.

greater than 60 ft. ± ½ in.

g = Differential camber between adjacent members:

¼ in. per 10 ft., ¾ in. max.

h = Local smoothness of any surface: ¼ in. in 10 ft.

k = Position of strands: ± ¼ in.

n = Longitudinal Position of blockout: ± 1 in.

o_1 = Position of dowel holes: ± ¼"

o_2 = Position of sleeves cast in beams, in both horizontal and vertical plane: ± ½ in.

p = Position of void: ± $^{3}/_{8}$"

Bearing area – deviation from plane surface: ± $^{1}/_{16}$"

Width of any one span = Plan width + $^{1}/_{8}$" per joint

Box Beam Tolerances:

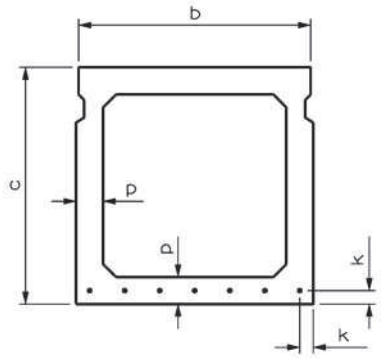

CROSS SECTION

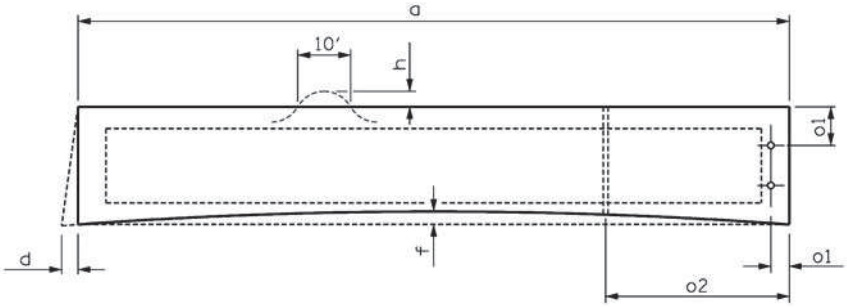

PLAN

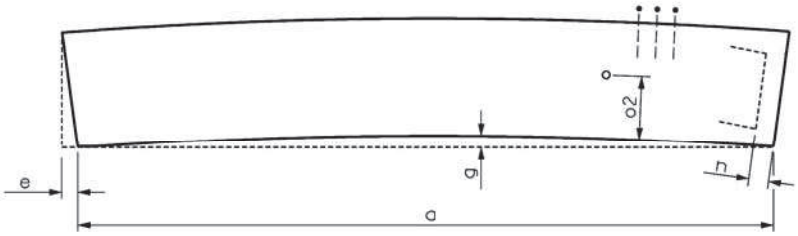

ELEVATION