NOTES ON THE PLANS

ALL REINFORCING STEEL IN BARRIER RAILS SHALL BE EPOXY COATED.

FOR EPOXY COATED REINFORCING STEEL, SEE SPECIAL PROVISIONS.

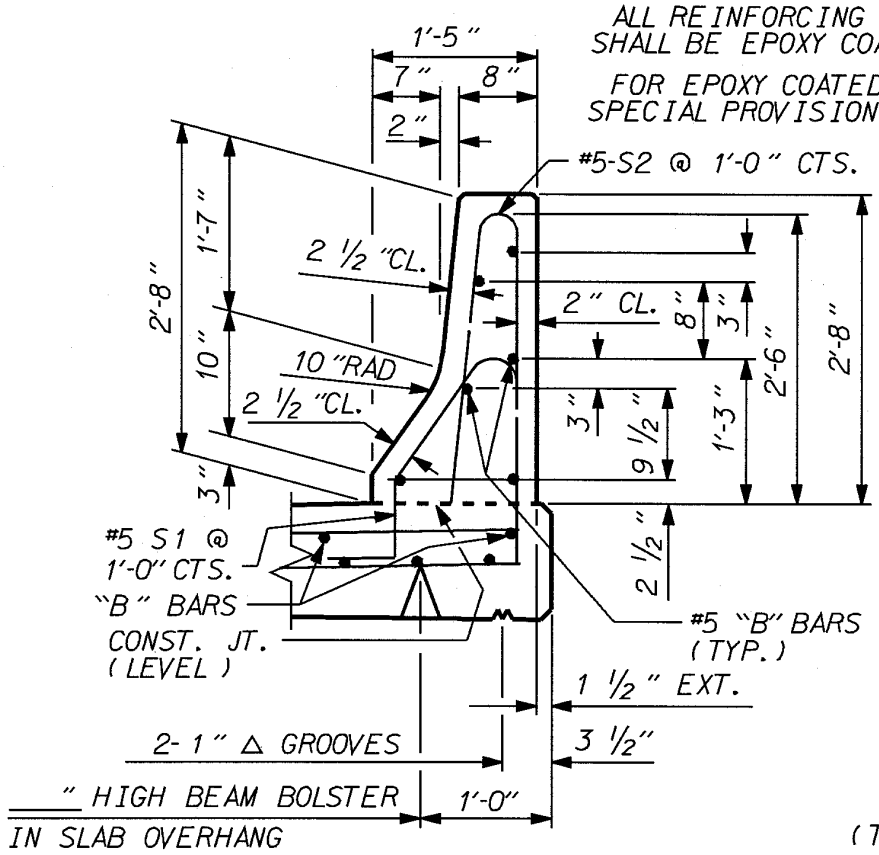

SECTION THRU RAIL

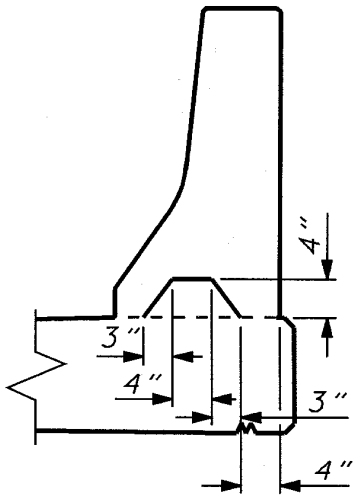

SECTION S-S

AT DAM IN OPEN JOINT (THIS IS TO BE USED ONLY WHEN SLIP FORM IS USED)

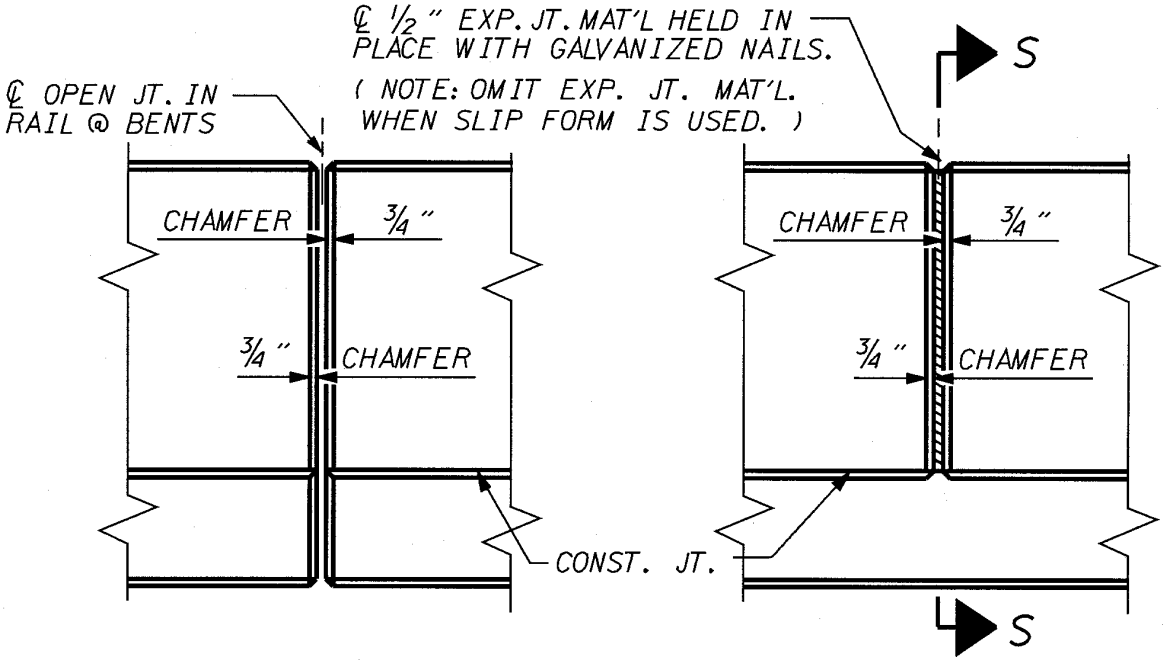

ELEVATION AT EXPANSION JOINTS

BARRIER RAIL DETAILS

WITHOUT WEARING SURFACE

FIGURE 7-1