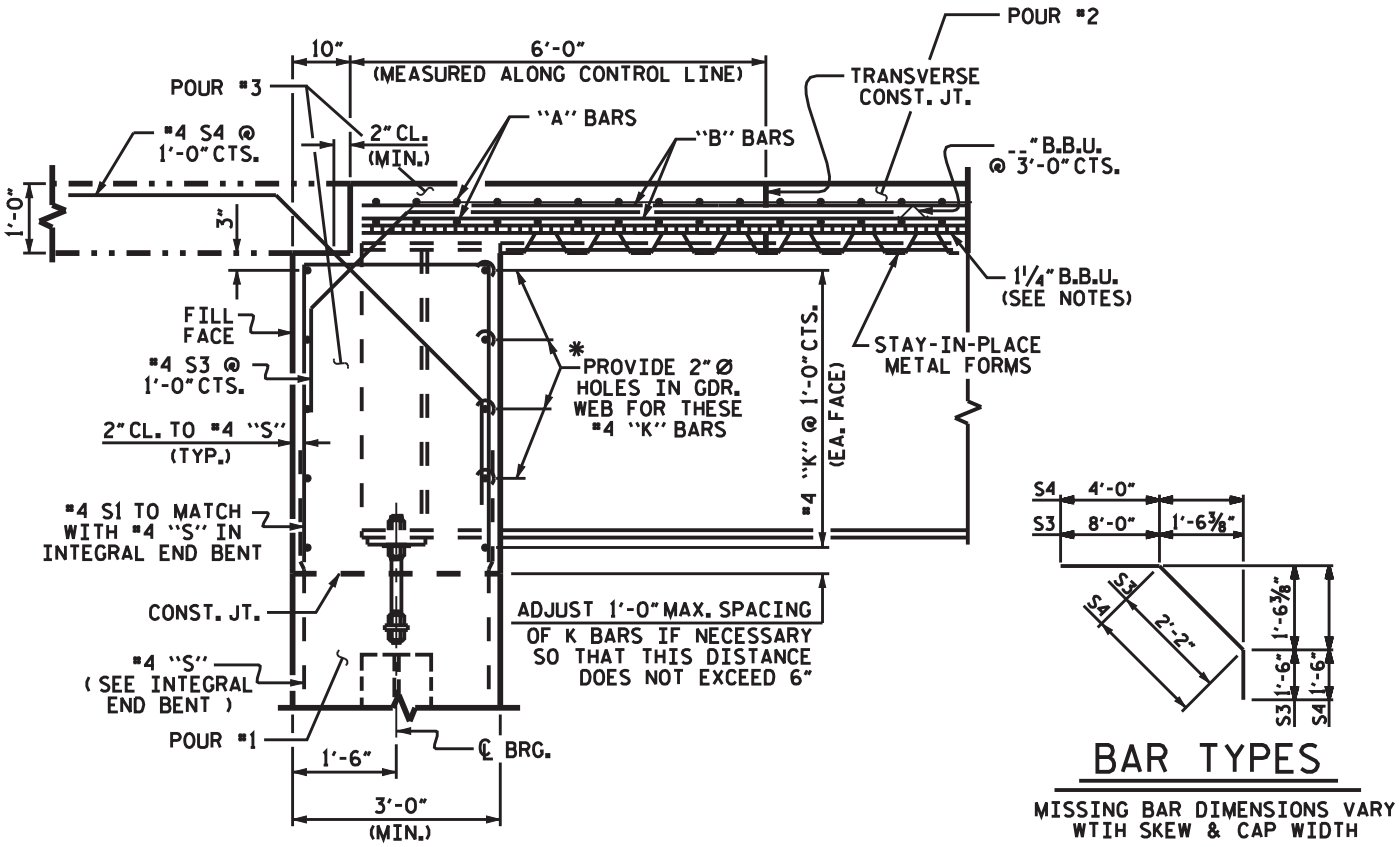

END OF GIRDER DETAIL AT INTEGRAL END BENT

* DIAMETER OF HOLES IN WEB MAY BE INCREASED TO ACCOMODATE SKEW

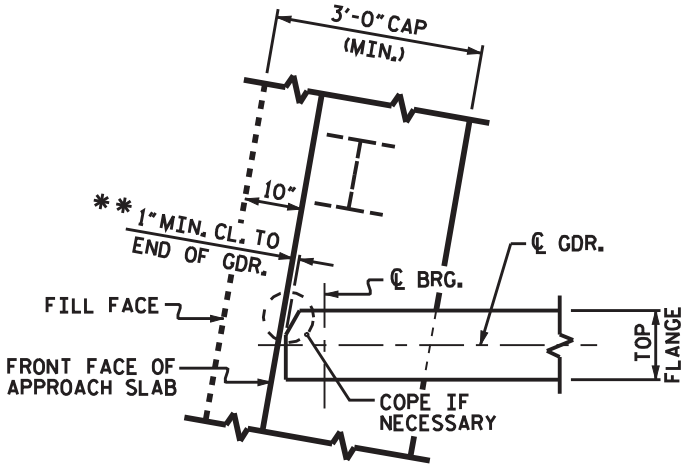

PLAN OF GIRDER AT INTEGRAL END BENT

** DO NOT SHOW THIS DIMENSION ON PLANS

INTEGRAL END BENT DETAILS

STEEL SUPERSTRUCTURE

FIGURE 6 – 132