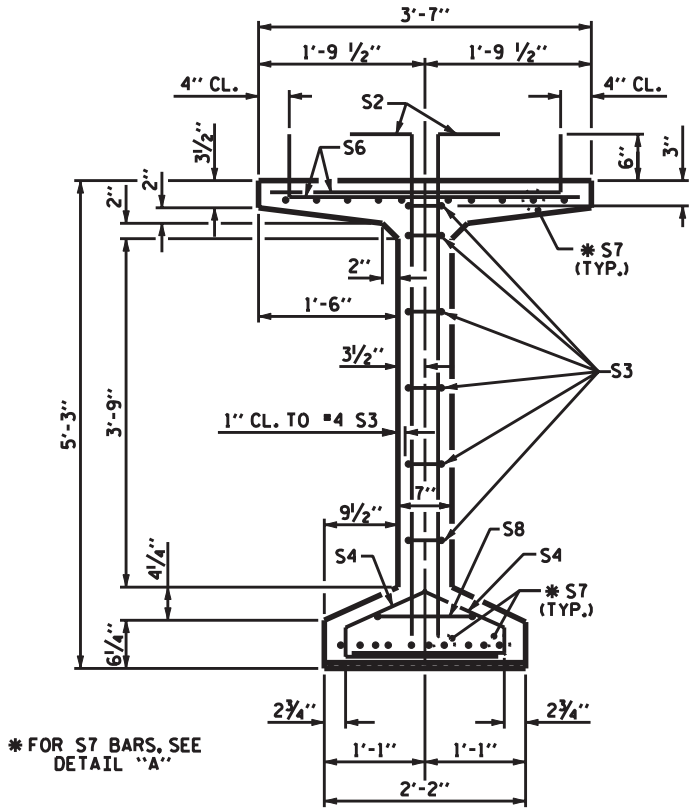

SECTION A-A

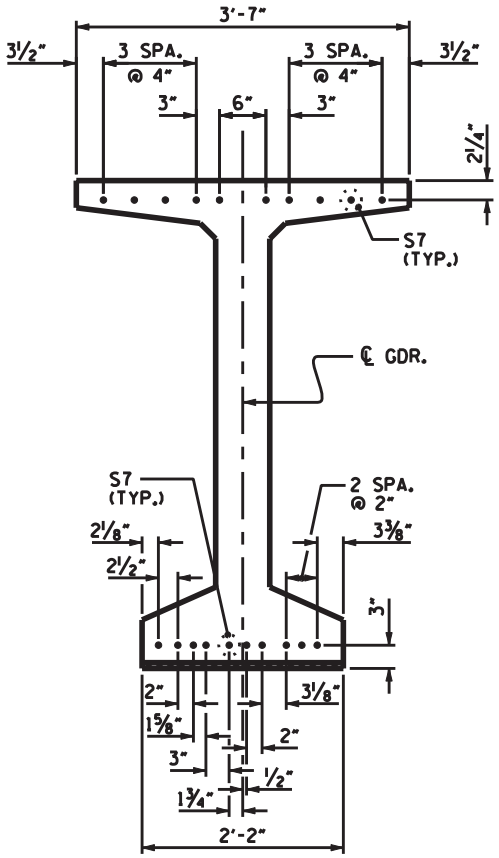

DETAIL "A"

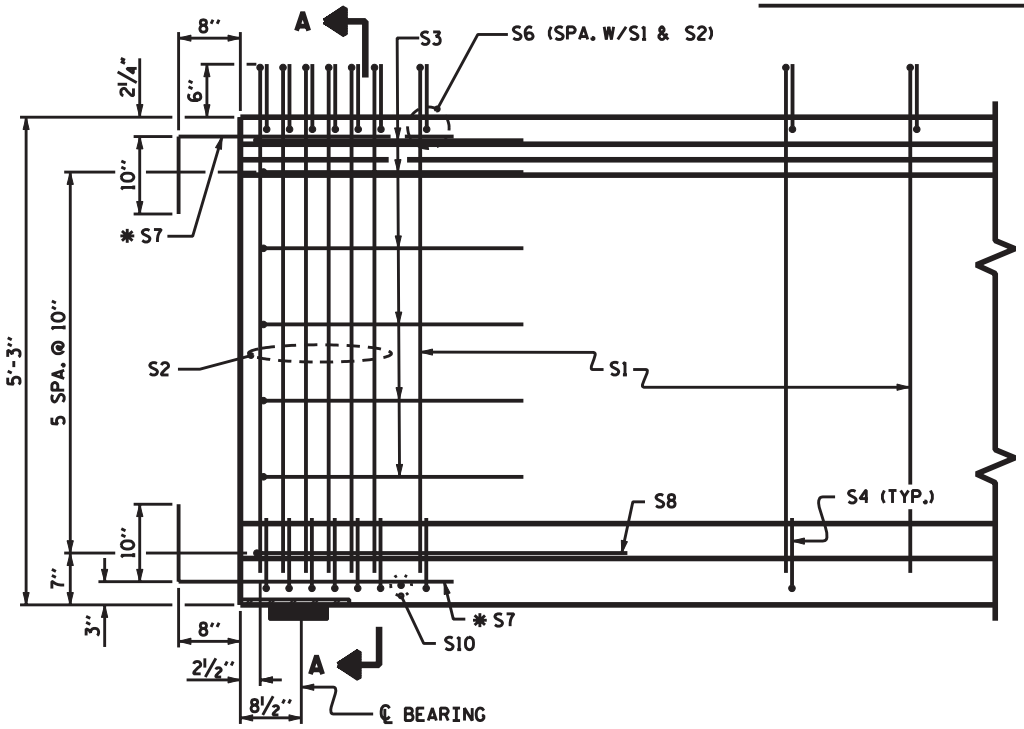

PARTIAL ELEVATION OF GIRDER

INTEGRAL END BENT DETAILS

PCG SUPERSTRUCTURE

FIGURE 6 – 136