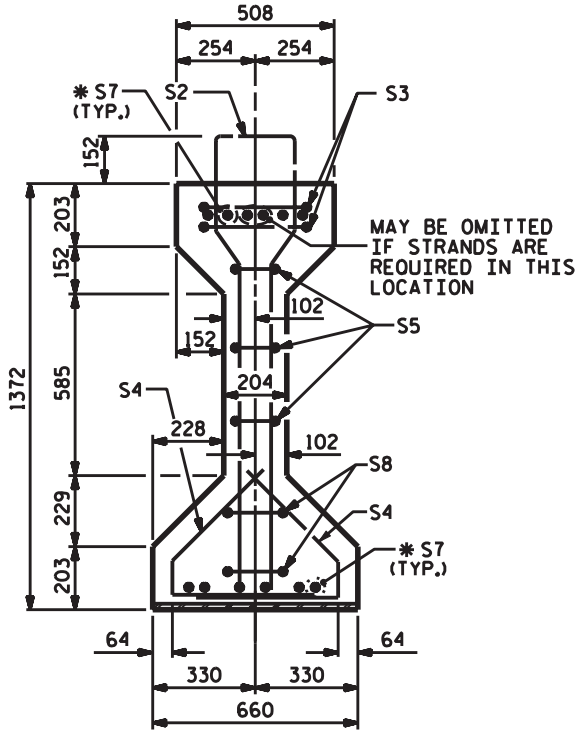

SECTION A-A

* FOR S7 BARS, SEE DETAIL "A"

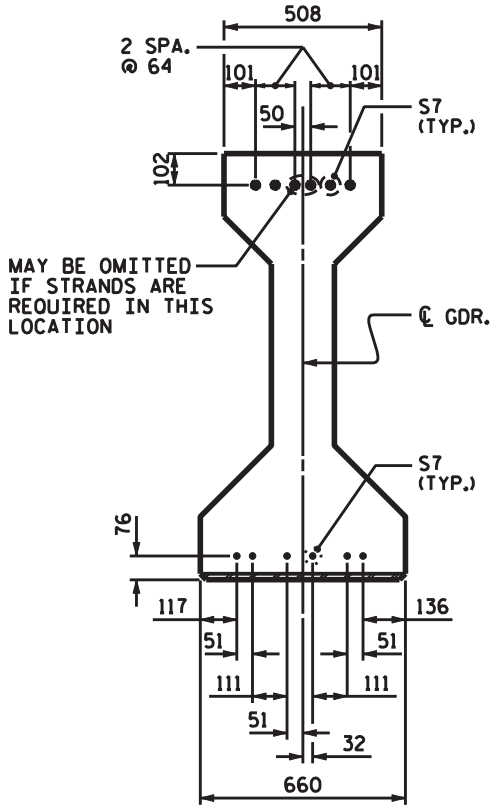

DETAIL "A"

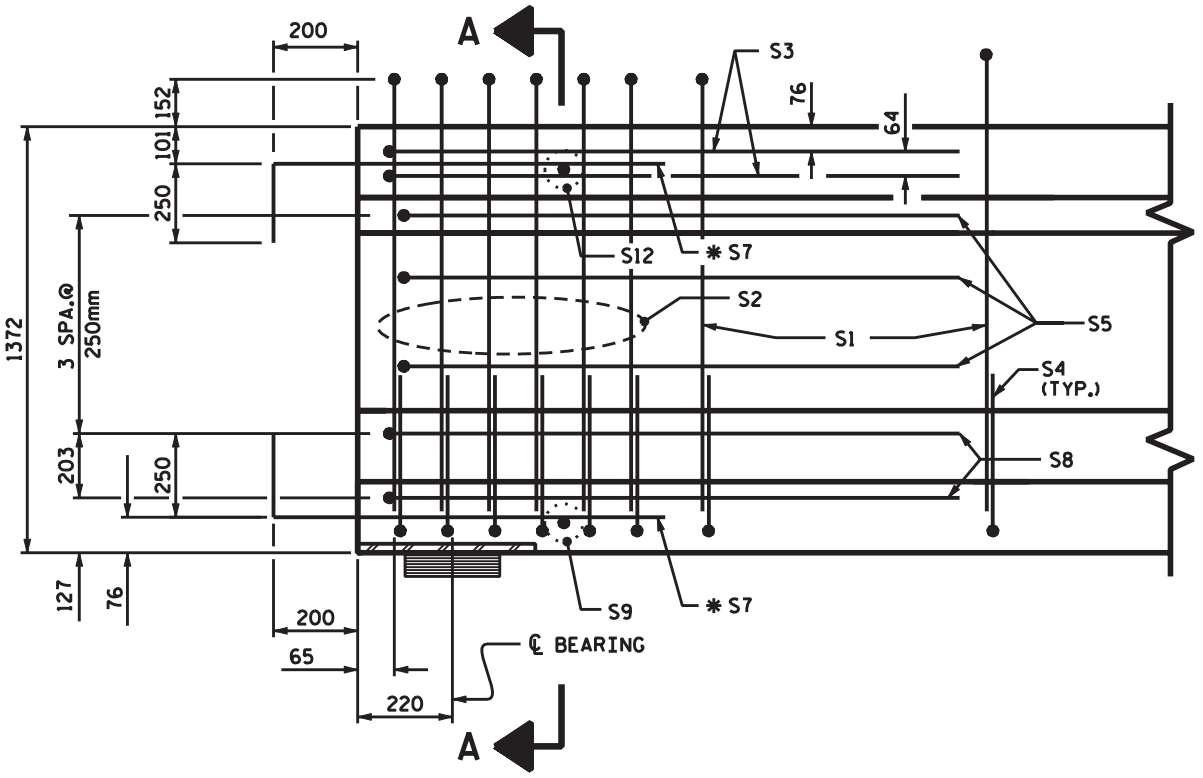

PARTIAL ELEVATION OF GIRDER

INTEGRAL END BENT DETAILS

PCG SUPERSTRUCTURE

FIGURE 6 – 135