NOTE TO DETAILER

* ADD 920mm TO SPLICE LENGTH IF SPREAD FOOTINGS ARE USED TO TAKE CARE OF POSSIBLE ADJUSTMENTS TO FOOTING ELEVATION

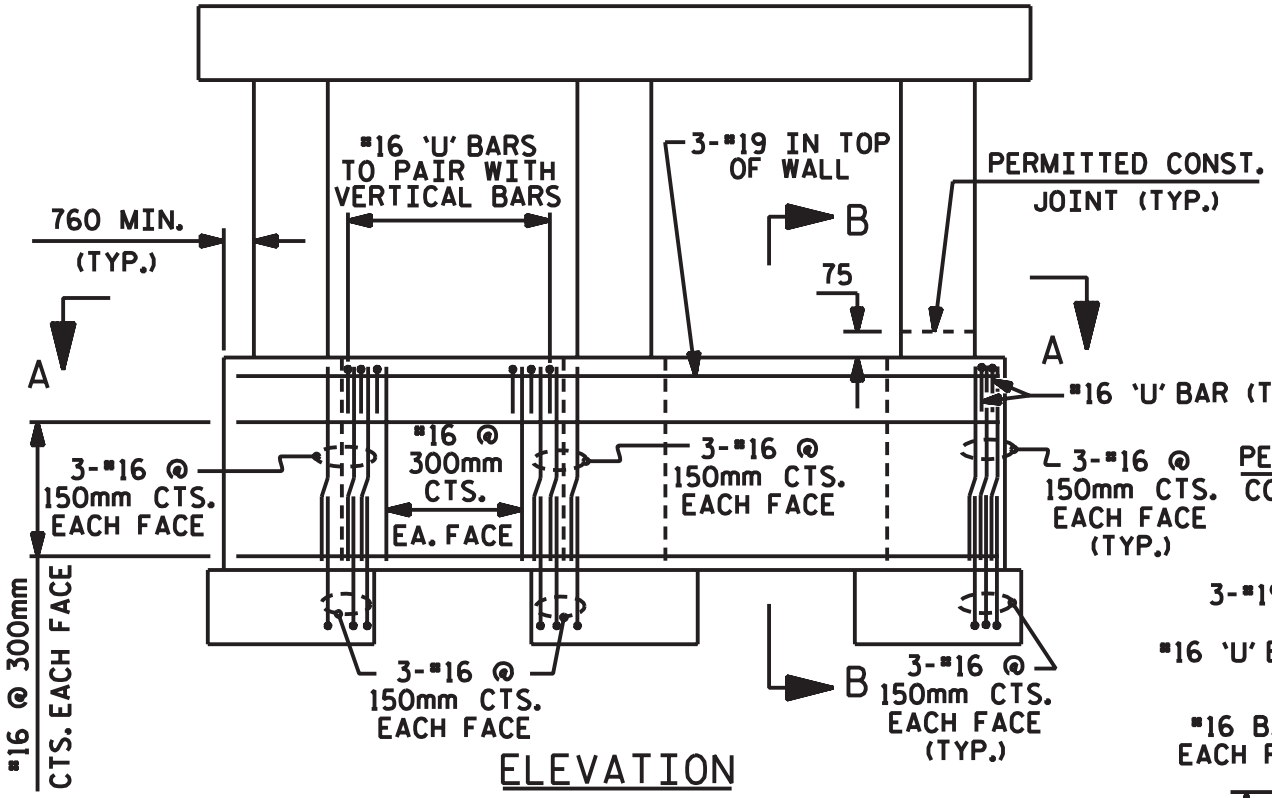


ELEVATION

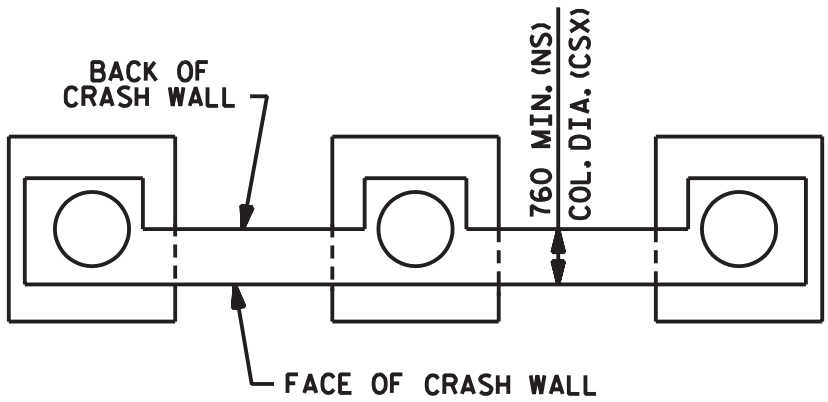


SECTION A-A

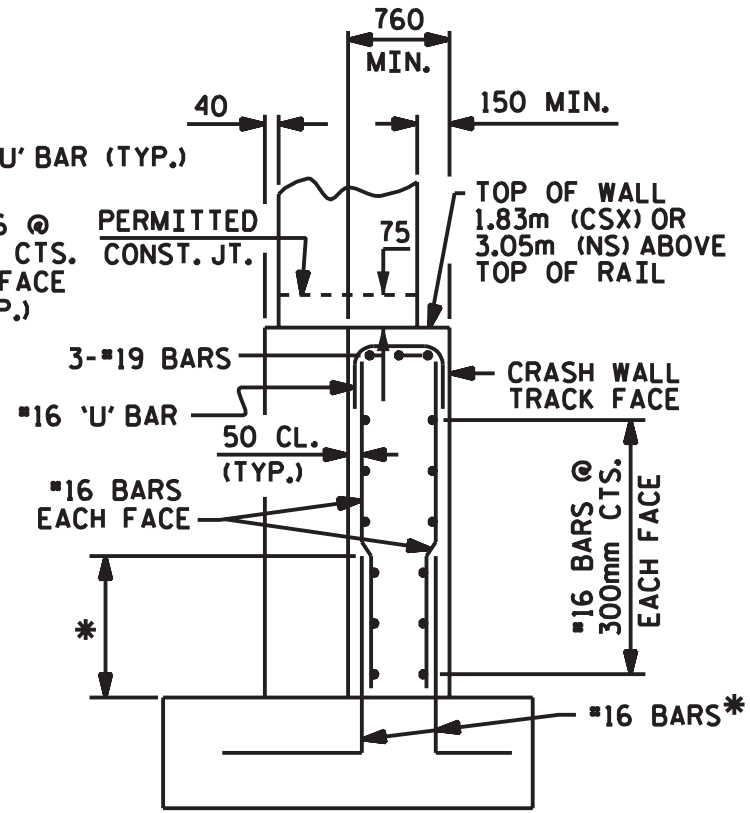


SECTION B-B

NS - NORFOLK SOUTHERN
CSX - CSX

# PIER CRASH WALL FOR RAILROAD OVERHEADS

( FOR MULTICOLUMN BENTS )