BRIDGE AS-BUILT EXAMPLE

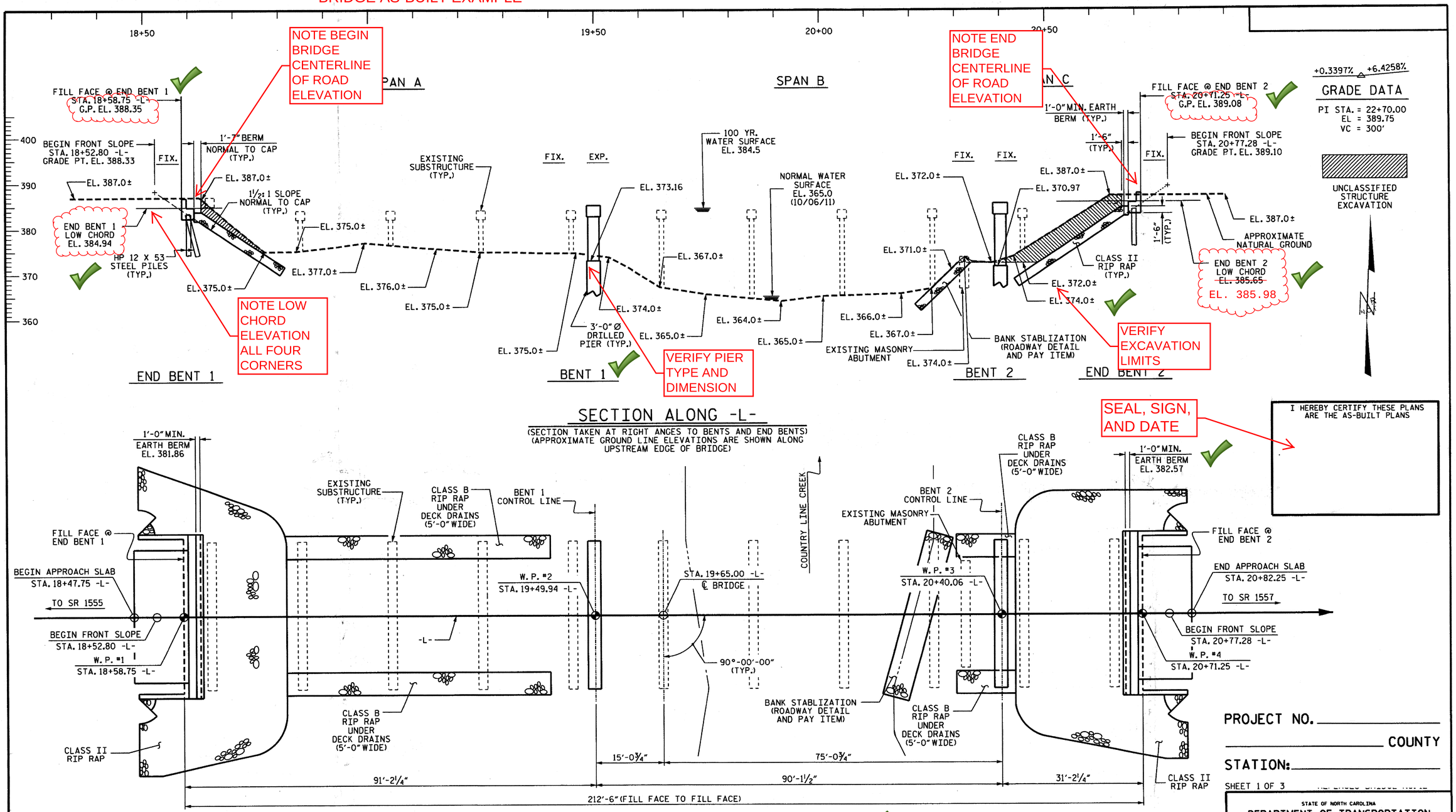

SECTION ALONG -L-

(SECTION TAKEN AT RIGHT ANGES TO BENTS AND END BENTS)
(APPROXIMATE GROUND LINE ELEVATIONS ARE SHOWN ALONG UPSTREAM EDGE OF BRIDGE)

OVERALL BRIDGE WIDTH=33'

VERIFY BRIDGE LENGTH AND WIDTH

42" STANDARD CONCRETE RAIL USED

VERIFY BRIDGE RAIL TYPE AND HEIGHT

PLAN

PIES AND DRILLED PIERS NOT SHOWN FOR CLARITY

PROJECT NO. _____

_____ COUNTY

STATION: _____

SHEET 1 OF 3

STATE OF NORTH CAROLINA
DEPARTMENT OF TRANSPORTATION
RALEIGH

GENERAL DRAWING

REVISIONS						SHEET NO.
NO.	BY:	DATE:	NO.	BY:	DATE:	S-T 38
1			3			TOTAL SHEETS
2			4			24

DRAWN BY : _____ DATE : 9/2012
CHECKED BY : _____ DATE : 10/2012

CULVERT AS-BUILT PLAN VIEW EXAMPLE

BENCH MARK #1 CHISELED SQUARE IN NW CORNER OF CONCRETE SIGN PAD: 627.97' LT. OF STA 17+19.28 -L-, EL. 764.18

F.A. PROJECT NO.: HSIP-1221(18)

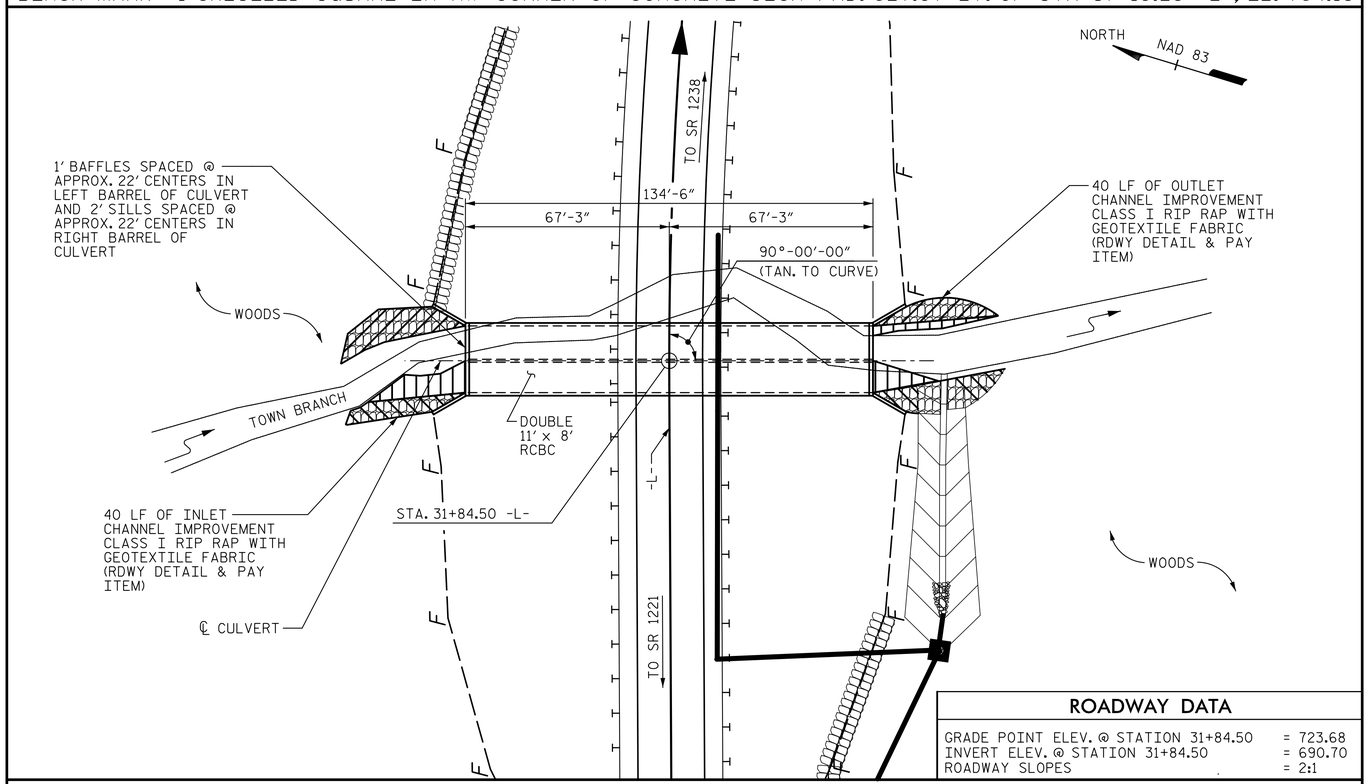

ROADWAY DATA

GRADE POINT ELEV. @ STATION 31+84.50	= 723.68
INVERT ELEV. @ STATION 31+84.50	= 690.70
ROADWAY SLOPES	= 2:1

LOCATION SKETCH

FOR UTILITY INFORMATION, SEE UTILITY PLANS AND SPECIAL PROVISIONS.

VERIFY LOCATION SKETCH

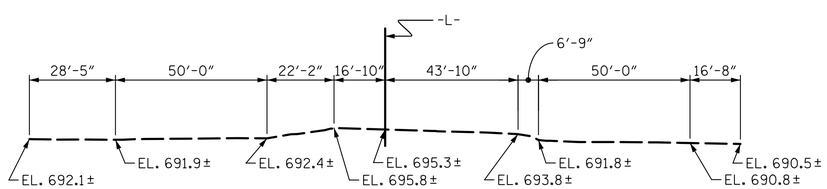

PROFILE ALONG ℄ CULVERT

TOTAL STRUCTURE QUANTITIES

CLASS A CONCRETE		
BARREL @ 3.854 CY/FT	518.4	C.Y.
WINGS, ETC.	24.4	C.Y.
SILLS/BAFFLES	8.6	C.Y.
TOTAL	551.4	C.Y.
REINFORCING STEEL		
BARREL, SILLS, BAFFLES	75,844	LBS.
WINGS, ETC.	1,453	LBS.
TOTAL	77,297	LBS.
FOUNDATION CONDITIONING MATERIAL	231	TONS
CULVERT EXCAVATION	LUMP SUM	
PLACEMENT OF NATURAL STREAM BED MATERIAL	LUMP SUM	

HYDRAULIC DATA

DESIGN DISCHARGE	= 1,000 CFS
FREQUENCY OF DESIGN FLOOD	= 50 YR.
DESIGN HIGH WATER ELEVATION	= 698.2
DRAINAGE AREA	= 1.3 SQ MI
BASE DISCHARGE (Q 100)	= 1,100 CFS
BASE HIGH WATER ELEVATION	= 698.82

OVERTOPPING FLOOD DATA

OVERTOPPING DISCHARGE	= 4,700 CFS
FREQUENCY OF OVERTOPPING FLOOD	= 500 YR +
OVERTOPPING FLOOD ELEVATION	= 724.0

NOTES

ASSUMED LIVE LOAD = HL-93 OR ALTERNATE LOADING.

DESIGN FILL = 24'

DETAILED DRAWINGS FOR FALSEWORK AND FORMS FOR THIS CULVERT SHALL BE SUBMITTED, SEE SHEET SN.

STEEL IN THE BOTTOM SLAB MAY BE SPLICED AT THE PERMITTED JOINT AT THE CONTRACTOR'S OPTION. EXTRA WEIGHT OF STEEL DUE TO THE SPLICES SHALL BE PAID FOR BY THE CONTRACTOR.

TRANSVERSE CONSTRUCTION JOINTS SHALL BE USED IN THE BARREL, SPACED TO LIMIT THE POURS TO A MAXIMUM OF 70 FT. LOCATION OF JOINTS SHALL BE SUBJECT TO APPROVAL OF THE ENGINEER.

FOR CULVERT DIVERSION DETAILS AND PAY ITEM, SEE EROSION CONTROL PLANS.

A 3 FOOT STRIP OF GEOTEXTILE SHALL BE ATTACHED TO THE FILL FACE OF THE WING COVERING THE ENTIRE LENGTH OF THE EXPANSION JOINT.

NO PRECAST REINFORCED BOX CULVERT OPTION WILL BE ALLOWED.

CONCRETE IN CULVERTS TO BE POURED IN THE FOLLOWING ORDER:

1. WING FOOTINGS AND FLOOR SLAB INCLUDING 4" OF ALL VERTICAL WALLS.
2. THE REMAINING PORTIONS OF THE WALLS, SILLS AND WINGS FULL HEIGHT FOLLOWED BY ROOF SLAB AND HEADWALLS.

THE RESIDENT ENGINEER SHALL CHECK THE LENGTH OF CULVERT BEFORE STAKING IT OUT TO MAKE CERTAIN THAT IT WILL PROPERLY TAKE CARE OF THE FILL.

DIMENSIONS FOR WING LAYOUT AS WELL AS ADDITIONAL REINFORCING STEEL EMBEDDED IN BARREL ARE SHOWN ON WING SHEET.

AT THE CONTRACTOR'S OPTION, HE MAY SPLICE THE VERTICAL REINFORCING STEEL IN THE INTERIOR FACE OF EXTERIOR WALLS AND BOTH FACES OF THE INTERIOR WALL ABOVE LOWER WALL CONSTRUCTION JOINT. THE SPLICE LENGTH SHALL BE AS PROVIDED IN THE SPLICE LENGTH CHART SHOWN ON THE PLANS. EXTRA WEIGHT OF STEEL DUE TO THE SPLICES SHALL BE PAID FOR BY THE CONTRACTOR.

FOR SUBMITTAL OF WORKING DRAWINGS, SEE SPECIAL PROVISIONS.

FOR FALSEWORK AND FORMWORK, SEE SPECIAL PROVISIONS.

FOR GROUT FOR STRUCTURES, SEE SPECIAL PROVISIONS.

FOR CRANE SAFETY, SEE SPECIAL PROVISIONS.

3"Ø WEEP HOLES INDICATED TO BE IN ACCORDANCE WITH THE SPECIFICATIONS.

NATURAL STREAM BED MATERIAL SHALL BE USED TO BACKFILL THE CULVERT BETWEEN SILLS AND BAFFLES. SEE SPECIAL PROVISIONS FOR "PLACEMENT OF NATURAL STREAM BED MATERIAL."

THE CONTRACTOR SHALL PROVIDE INDEPENDENT ASSURANCE SAMPLES OF REINFORCING STEEL AS FOLLOWS: FOR PROJECTS REQUIRING UP TO 400 TONS OF REINFORCING STEEL, ONE 30 INCH SAMPLE OF EACH SIZE BAR USED, AND FOR PROJECTS REQUIRING OVER 400 TONS OF REINFORCING STEEL, TWO 30 INCH SAMPLES OF EACH SIZE BAR USED. THE BARS FROM WHICH THE SAMPLES ARE TAKEN MUST THEN BE SPLICED WITH REPLACEMENT BARS OF THE SIZE AND LENGTH OF THE SAMPLE, PLUS A MINIMUM LAP SPLICE OF THIRTY BAR DIAMETERS. PAYMENT FOR THE SAMPLES OF REINFORCING STEEL SHALL BE CONSIDERED INCIDENTAL TO VARIOUS PAY ITEMS.

PROJECT NO. _____

_____ COUNTY

STATION: _____

SHEET 1 OF 5

I HEREBY CERTIFY THESE PLANS ARE THE AS-BUILT PLANS

SEAL, SIGN, AND DATE

STATE OF NORTH CAROLINA
DEPARTMENT OF TRANSPORTATION
RALEIGH

BARREL STANDARD
DOUBLE 11 FT. X 8 FT.
CONCRETE BOX CULVERT
90° SKEW

REVISIONS							SHEET NO.
NO.	BY:	DATE:	NO.	BY:	DATE:		C-1
1			3				TOTAL SHEETS
2			4				13

ASSEMBLED BY :	DATE : MAY 2015	SPECIAL
CHECKED BY :	DATE : MAY 2015	
DRAWN BY :	DATE : JULY, 1990	STANDARD
CHECKED BY :	DATE : JULY, 1990	

ADDED NOV. 1, 1990

STD. NO. CB12A

CULVERT AS-BUILT SECTION VIEW EXAMPLE

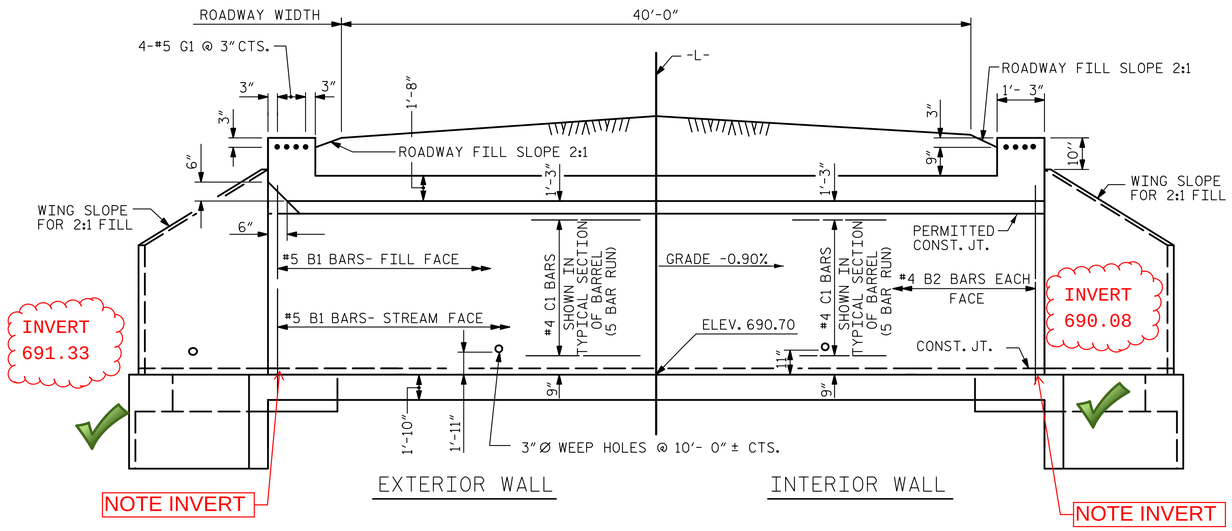

CULVERT SECTION NORMAL TO ROADWAY

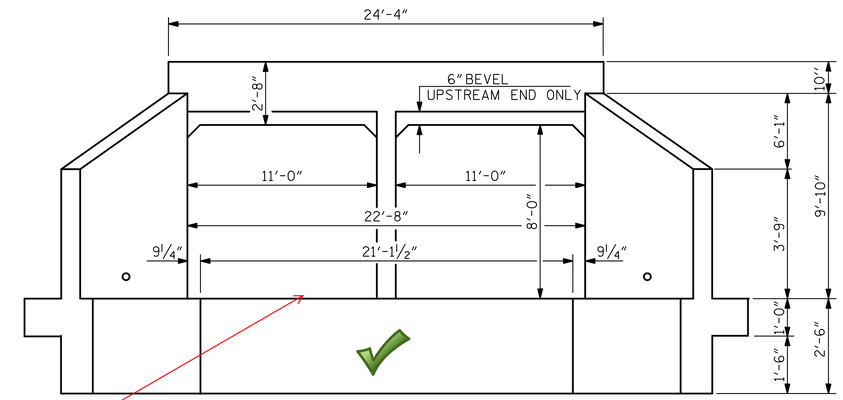

END ELEVATION

VERIFY CULVERT LENGTH, SIZE, AND NUMBER OF BARRELS

VERIFY SILL DIMENSIONS IF APPLICABLE

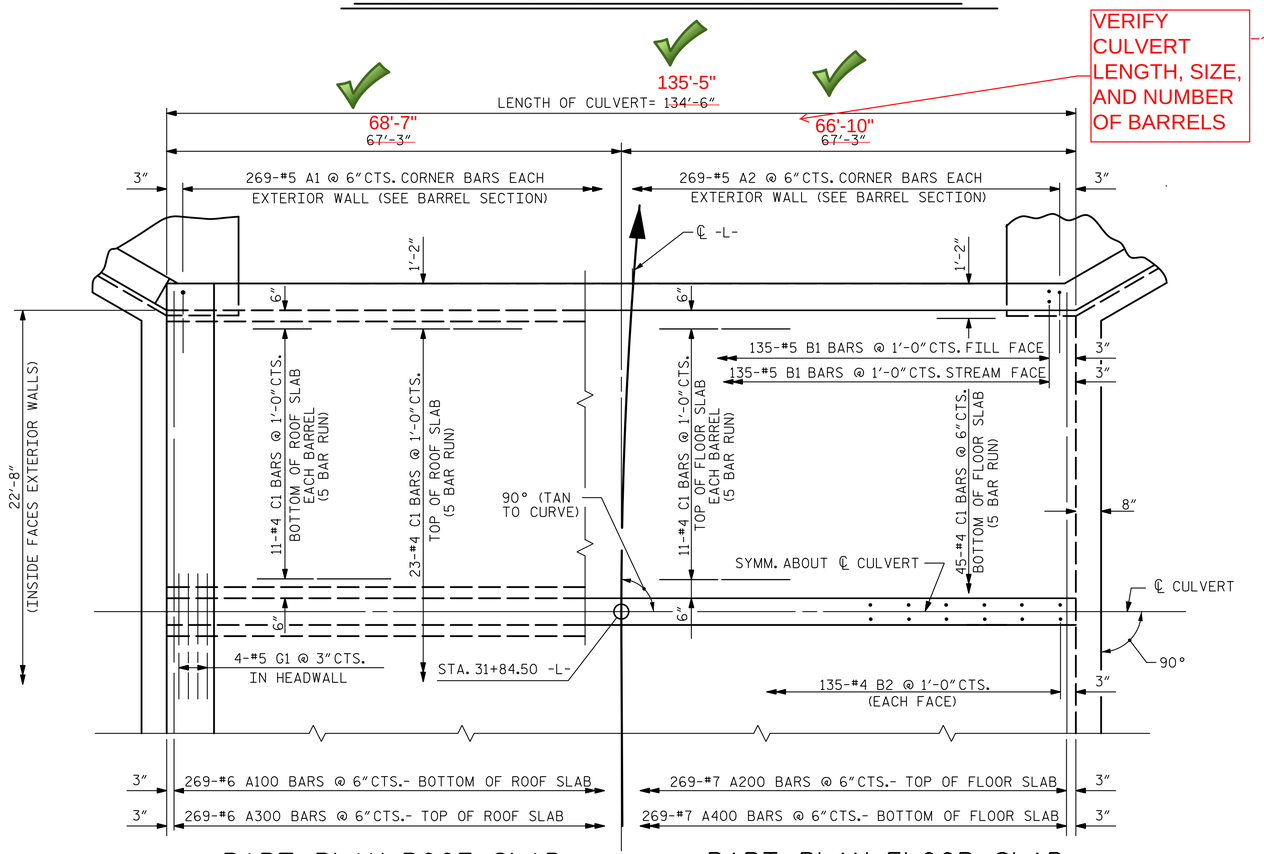

PART PLAN-ROOF SLAB

PART PLAN-FLOOR SLAB

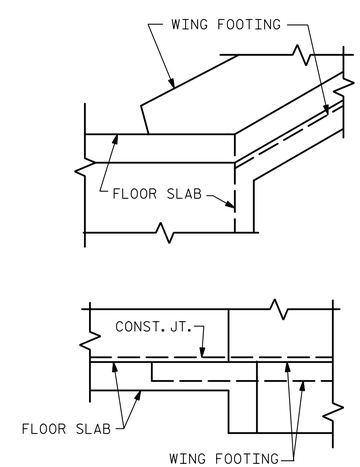

DETAIL

CONNECTION OF WING FOOTING AND FLOOR SLAB WHEN SLAB IS THICKER THAN FOOTING

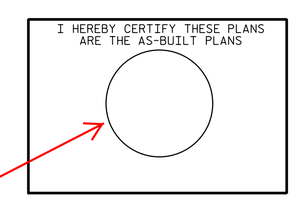

SEAL, SIGN, AND DATE

PROJECT NO. _____

_____ COUNTY

STATION: _____ _____

SHEET 2 OF 5

STATE OF NORTH CAROLINA
DEPARTMENT OF TRANSPORTATION
RALEIGH

BARREL STANDARD
DOUBLE 11 FT. X 8 FT.
CONCRETE BOX CULVERT
90° SKEW

REVISIONS						SHEET NO.
NO.	BY:	DATE:	NO.	BY:	DATE:	C-2
1			3			TOTAL SHEETS
2			4			13

ASSEMBLED BY :	DATE :	SPECIAL
CHECKED BY :	DATE :	
DRAWN BY :	DATE : MAY 1971	STANDARD
CHECKED BY :	DATE : JULY 1971	

STD. NO. CB12

CULVERT AS-BUILT ROADWAY PROFILE VIEW EXAMPLE

5/28/99

PROJECT REFERENCE NO.	SHEET NO.
ROADWAY DESIGN ENGINEER	HYDRAULICS ENGINEER

-L-

PIPE HYDRAULIC DATA
18" RCP-III STA 96+40 -L-

DRAINAGE AREA	= 1.55	AC
DESIGN FREQUENCY	= 50	YRS
DESIGN DISCHARGE	= 5	CFS
DESIGN HW ELEVATION	= 766.70	FT
100 YEAR DISCHARGE	= 5	CFS
100 YEAR HW ELEVATION	= 766.70	FT
OVERTOPPING FREQUENCY	= 500+	YRS
OVERTOPPING DISCHARGE	= 21	CFS
OVERTOPPING ELEVATION	= 774.44	FT

INV IN = 765.44 INV OUT = 764.88

PIPE HYDRAULIC DATA
36" RCP-III STA 99+23 -L-

DRAINAGE AREA	= 10.52	AC
DESIGN FREQUENCY	= 50	YRS
DESIGN DISCHARGE	= 34	CFS
DESIGN HW ELEVATION	= 760.05	FT
100 YEAR DISCHARGE	= 36	CFS
100 YEAR HW ELEVATION	= 760.16	FT
OVERTOPPING FREQUENCY	= 500+	YRS
OVERTOPPING DISCHARGE	= 100	CFS
OVERTOPPING ELEVATION	= 766.05	FT

INV IN = 757.13 INV OUT = 756.60

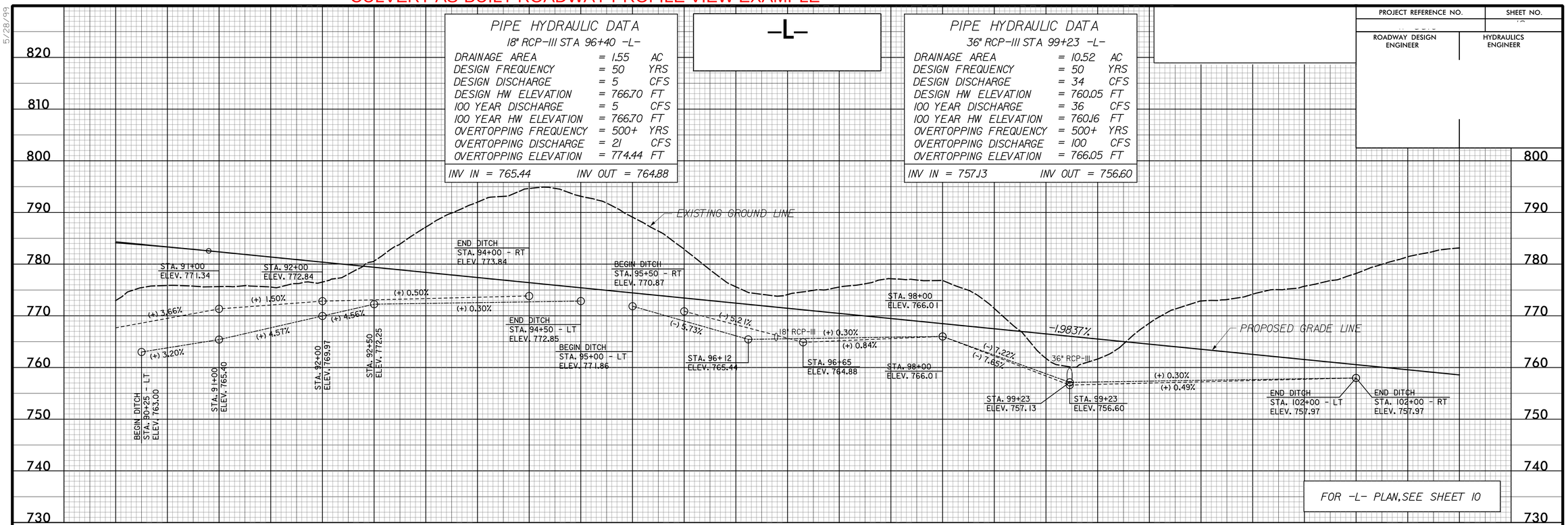

FOR -L- PLAN, SEE SHEET 10

-L-

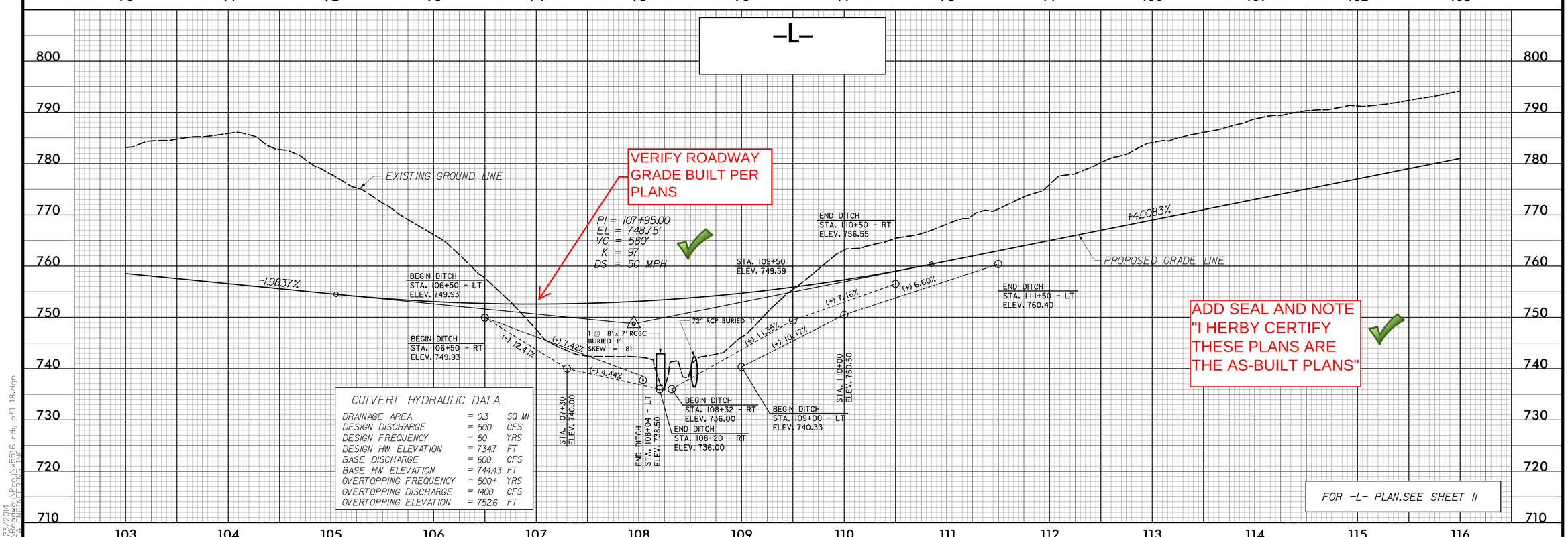

VERIFY ROADWAY GRADE BUILT PER PLANS

ADD SEAL AND NOTE "I HERBY CERTIFY THESE PLANS ARE THE AS-BUILT PLANS"

CULVERT HYDRAULIC DATA

DRAINAGE AREA	= 0.3	SQ MI
DESIGN DISCHARGE	= 500	CFS
DESIGN FREQUENCY	= 50	YRS
DESIGN HW ELEVATION	= 734.7	FT
BASE DISCHARGE	= 600	CFS
BASE HW ELEVATION	= 744.43	FT
OVERTOPPING FREQUENCY	= 500+	YRS
OVERTOPPING DISCHARGE	= 1400	CFS
OVERTOPPING ELEVATION	= 752.6	FT

FOR -L- PLAN, SEE SHEET 11

5/23/2014
R:\Roadway\Proj\5516_rdy_pfl_18.dgn
10:04:00 AM EDT
USER: mwilson