PROJECT REFERENCE NO.	SHEET NO.
X-XXXX	EC-2H
R/W SHEET NO.	
ROADWAY DESIGN ENGINEER	HYDRAULICS ENGINEER

EARTHEN DAM WITH SKIMMER

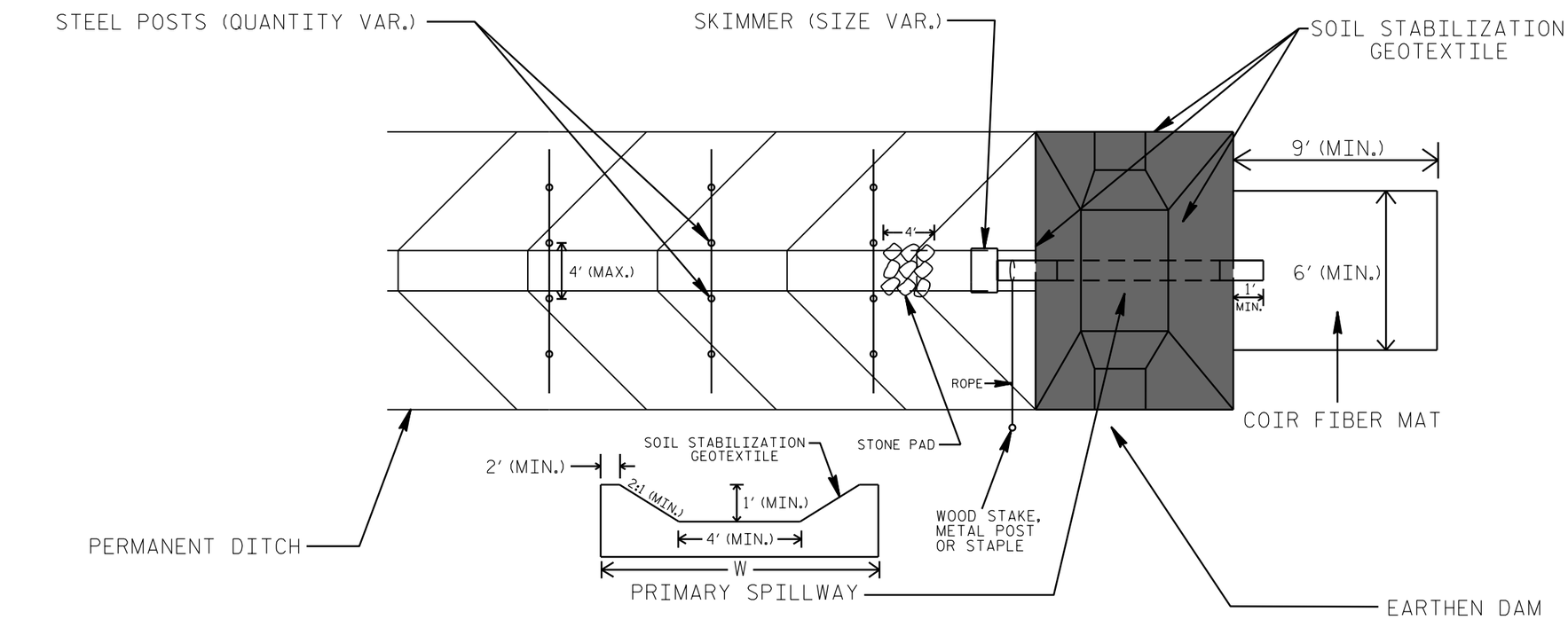

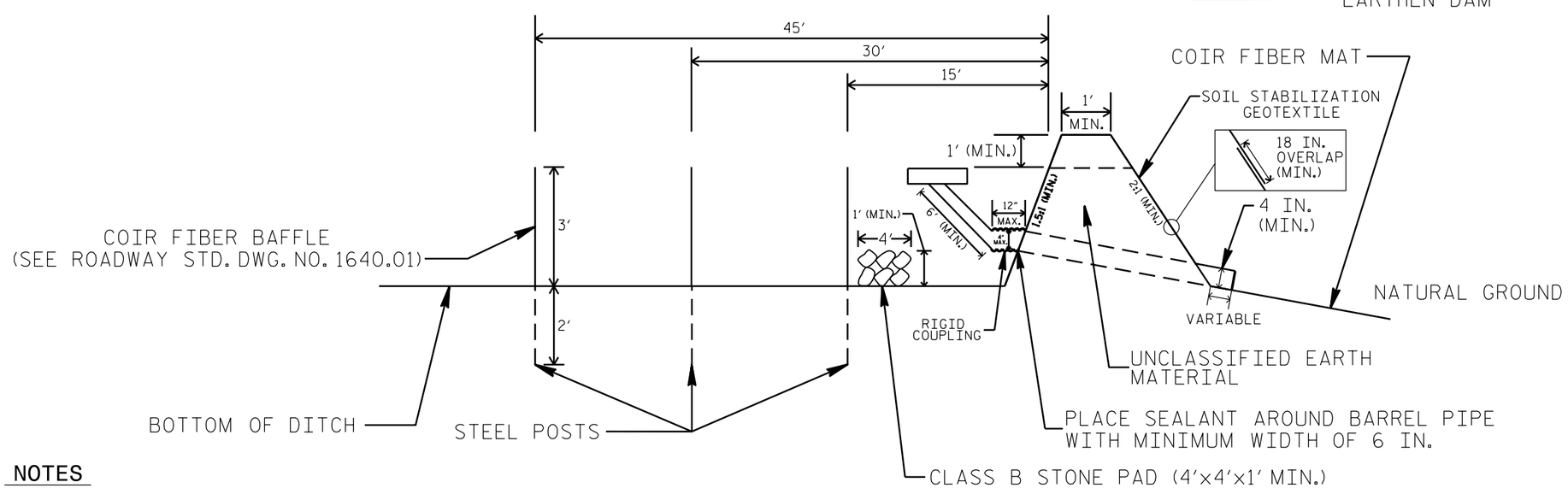

2″ x 2″ (nominal) WOODEN STAKE

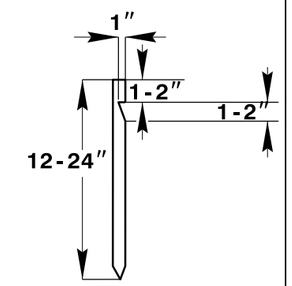

#10 STEEL REINFORCEMENT BAR

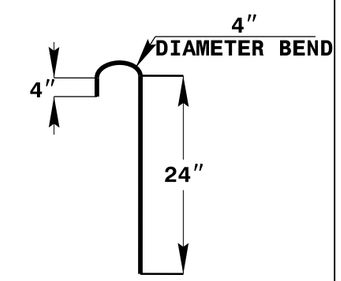

1″ (nominal) STAPLE

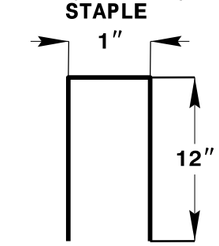

COIR FIBER MAT ANCHOR OPTIONS

NOTES

1. LIMIT EARTHEN DAM HEIGHT TO 5 FT.
2. DETERMINE PRIMARY SPILLWAY LENGTH (FT.) USING Q/0.8, WHERE Q IS FLOW RATE (CFS) INTO BASIN.
3. SOIL STABILIZATION GEOTEXTILE FOR PRIMARY SPILLWAY SHALL BE ONE CONTINUOUS PIECE OF MATERIAL OR OVERLAPPED 18 IN. (MIN.).

NOT TO SCALE