PROJECT REFERENCE NO. | SHEET NO. Sig. M 2

Fabrication Details – All Poles

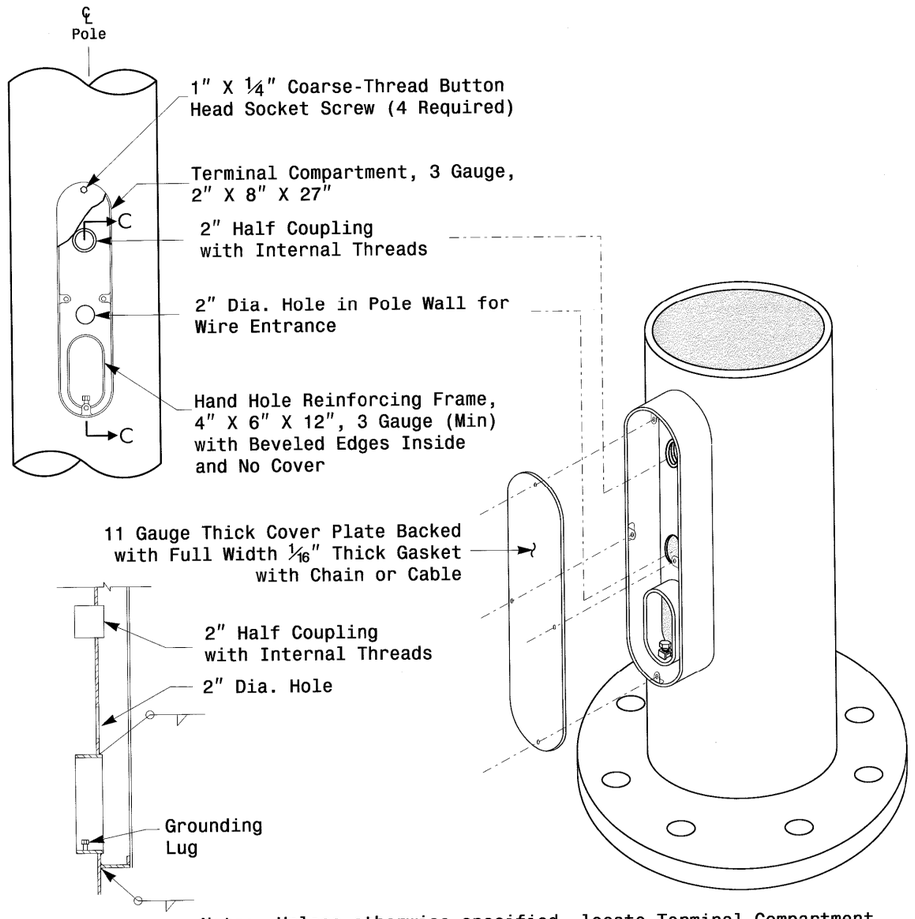

Section C-C

Note: Unless otherwise specified, locate Terminal Compartment 1 foot above the pole base plate at 180 degrees on the pole's radial index.

Terminal Compartment Detail

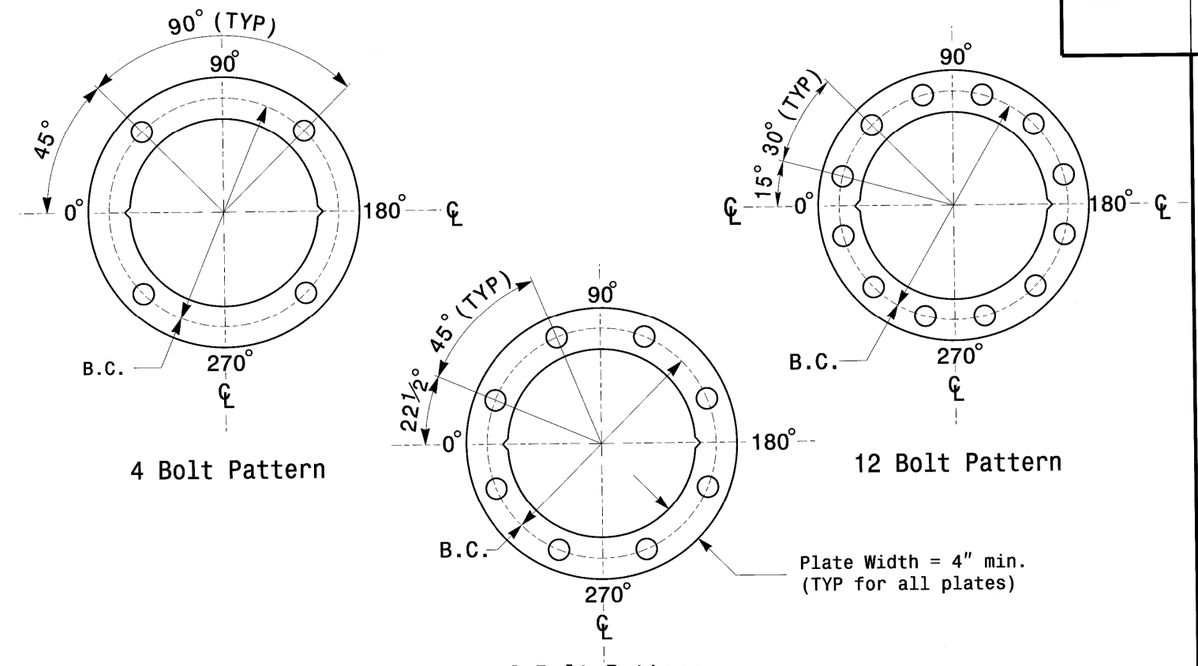

Construct Templates and Plates from ¼" min. thick Steel. Galvanizing is not required.

Base Plate Template and Anchor Bolt Lock Plate Details

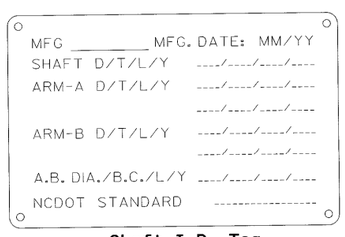

Shaft I.D. Tag
(Provide on Strain Poles and Mast Arm Poles)

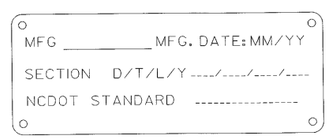

Arm I.D. Tag
(Provide on each section of a multi-section mast arm)

Notes:
1) D= Diameter, T= Thickness, L= Length, Y= Yield Strength
2) A.B. = Anchor Bolt
3) B.C. = Bolt Circle of Anchor Bolts
4) If Custom Design, use "NCDOT STANDARD" line for pole I.D. number and Signal Inv. Number.
5) See drawing M4 for mounting positions of I.D. tags.

Identification Tag Details

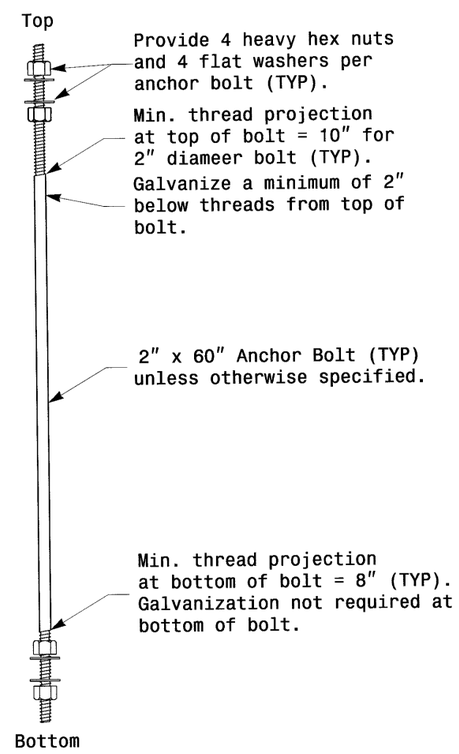

Anchor Bolt Detail

Note: See Strain Pole drawing M3 and Mast arm drawing M4 for base plate weld details.

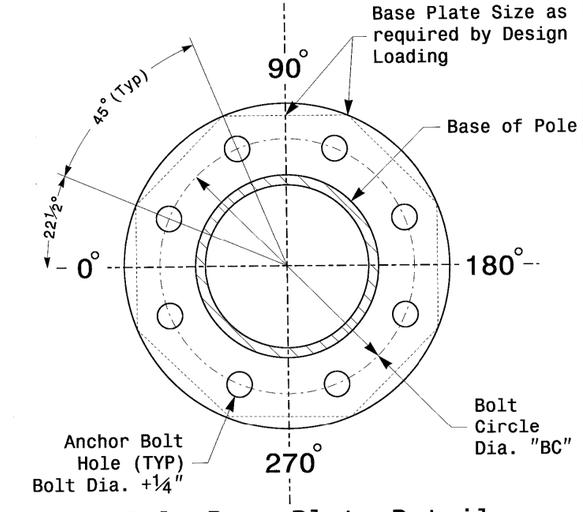

8 Bolt Base Plate Detail

Prepared in the Offices of: Transportation Mobility and Safety Division, State of North Carolina, Department of Transportation, Signal Design Section, 750 N.Greenfield Pkwy,Garner,NC 27529

Typical Fabrication Details Common To All Metal Poles

PLAN DATE:	AUGUST 2013	DESIGNED BY:	C.F. ANDREWS
PREPARED BY:	N. BITTING	REVIEWED BY:	D.C. SARKAR

SCALE: 0 NA NONE

REVISIONS | INIT. | DATE

SEAL: NORTH CAROLINA PROFESSIONAL SEAL 028094 ENGINEER DEBESH C. SARKAR

D. Sarkar 8.7.2013
SIGNATURE DATE

SIG. INVENTORY NO.

07-AUG-2013 13:15
S:\ITS&SU\ITS Signals\Workgroups\Structures\Drawings\2012 Standard Strain Pole Dwgs\2012 m2.dgn
nbitting