STATE OF
NORTH CAROLINA
DEPT. OF TRANSPORTATION
DIVISION OF HIGHWAYS
RALEIGH, N.C.

2-14

ENGLISH STANDARD DRAWING FOR

TYPICAL SIGNING FOR REST AREAS

SHEET 1 OF 3

(1) NO OVERNIGHT PARKING (OPTION) R7-302b 108" X 18"
REST AREA 1 MILE — WHITE ON BLUE D5-1 120" X 60"
NEXT REST AREA XX MI (OPTION)
OR
REST AREA 2 MILES — D5-1a 120" X 60"

(2) NO OVERNIGHT PARKING (OPTION) R7-302b 108" X 18"
REST AREA NEXT RIGHT — D5-1b 144" X 48"

(3) (OPTION) EXIT XX M.P.H. — W13-2 24" X 30"

(4) REST AREA — 78" X 78"
(OPTION) D9-6

(5) (OPTION) RAMP XX M.P.H. — W13-3 24" X 30"

(6) WRONG WAY — R5-1a 36" X 24"

(8) TRUCKS CARS WITH TRAILERS / CARS — WHITE ON BLUE 108" X 42"

(9) DO NOT ENTER — R5-1 30" X 30"

(10) NO OVERNIGHT PARKING — R7-302a 18" X 24"

(11) NO PETS ALLOWED IN BUILDINGS — M10-18b 21" X 15"

(12) KEEP PETS ON LEASH — M10-19 12" X 18"

(13) RESERVED PARKING / MAXIMUM PENALTY $250 / VAN ACCESSIBLE (OPTIONAL)
OR
RESERVED PARKING / MAXIMUM PENALTY $250 / VAN ACCESSIBLE (OPTIONAL) — R7-8E 12" X 26"
R7-8a OR R7-8b

(14) PET EXERCISE AREA → — M10-18aR 15" X 6"

(15) PET EXERCISE ← AREA — M10-18aL 15" X 6"

(16) YIELD — R1-2 36" X 36" X 36"

(17) ONE WAY — R6-1 (R) 54" X 18"

(18) ONE WAY — R6-1 (L) 54" X 18"

(19) FASTEN SEAT BELTS — M10-20 24" X 9"

(20) W4-1 (R) 48" X 48"

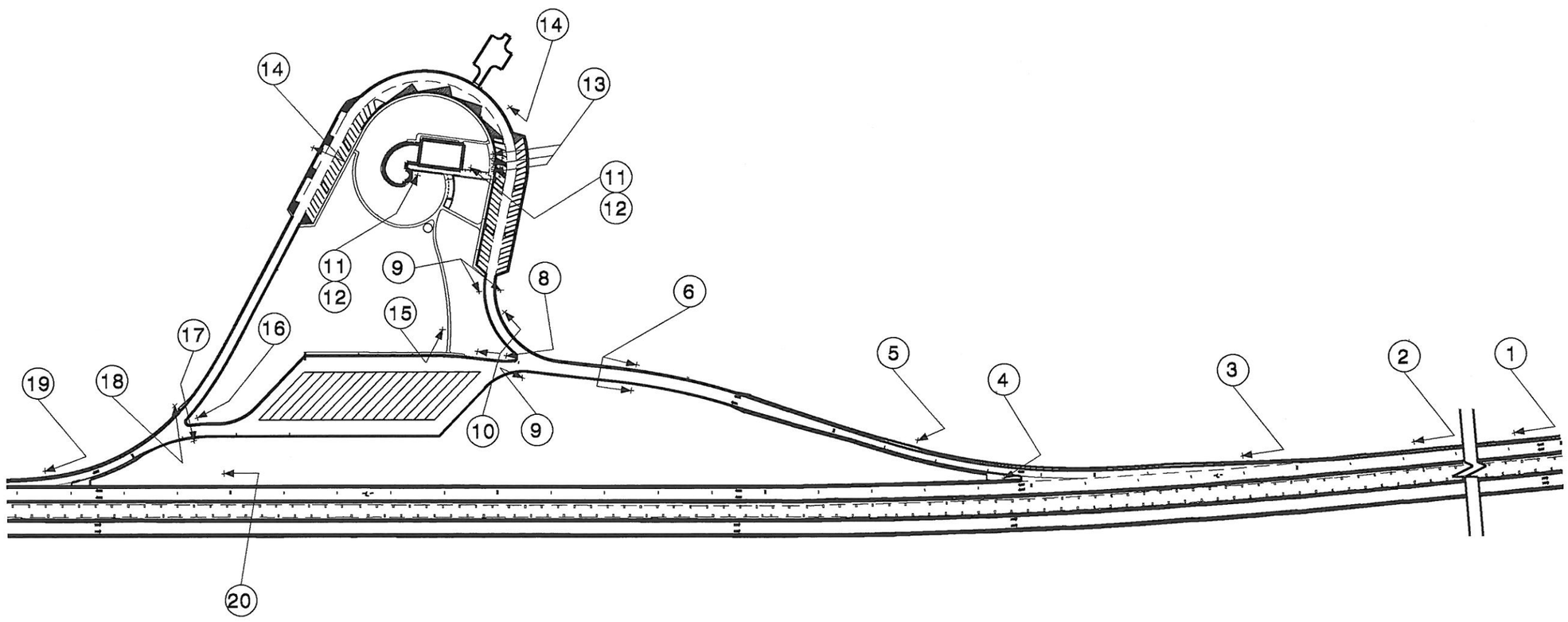

STATE OF
NORTH CAROLINA
DEPT. OF TRANSPORTATION
DIVISION OF HIGHWAYS
RALEIGH, N.C.

2-14

ENGLISH STANDARD DRAWING FOR

TYPICAL SIGNING FOR REST AREAS

SHEET 1 OF 3

STATE OF
NORTH CAROLINA
DEPT. OF TRANSPORTATION
DIVISION OF HIGHWAYS
RALEIGH, N.C.

4-08

1. NO OVERNIGHT PARKING (OPTION) R7-302b 108" X 16"
   REST AREA 1 MILE — D5-1 120" X 60"
   NEXT REST AREA XX MI (OPTION)
   OR
   REST AREA 2 MILES — D5-1a 120" X 60"
2. NO OVERNIGHT PARKING (OPTION) R7-302b 108" X 16"
   REST AREA NEXT RIGHT — D5-1b 144" X 48"
3. (OPTION) EXIT XX M.P.H. — W13-2 24" X 30"
4. REST AREA — 78" X 78"
   (OPTION) D9-6
5. (OPTION) RAMP XX M.P.H. — W13-3 24" X 30"
6. WRONG WAY — R5-1a 36" X 24"
7. Operation Rest Assured — TO BE DETERMEND
   FOR EMERGENCIES DIAL 911 OR *HP (*47) — TO BE DETERMEND
8. TRUCKS CARS WITH TRAILERS / CARS — WHITE ON BLUE 108" X 42"
9. DO NOT ENTER — R5-1 30" X 30"
10. NO OVERNIGHT PARKING — R7-302a 18" X 24"
11. NO PETS ALLOWED IN BUILDINGS — M10-18b 21" X 15"
12. KEEP PETS ON LEASH — M10-19 12" X 18"
13. RESERVED PARKING / MAXIMUM PENALTY $250 / VAN ACCESSIBLE (OPTIONAL)
    OR
    RESERVED PARKING / MAXIMUM PENALTY $250 / VAN ACCESSIBLE (OPTIONAL) — R7-8E 12" X 26"
    R7-8a OR R7-8b
14. PET EXERCISE AREA → — M10-18aR 15" X 6"
15. YIELD — R1-2 36" X 36" X 36"
16. ONE WAY → — R6-1 (R) 54" X 18"
17. ← ONE WAY — R6-1 (L) 54" X 18"
18. FASTEN SEAT BELTS — M10-20 24" X 9"
19. W4-1 (R) 48" X 48"

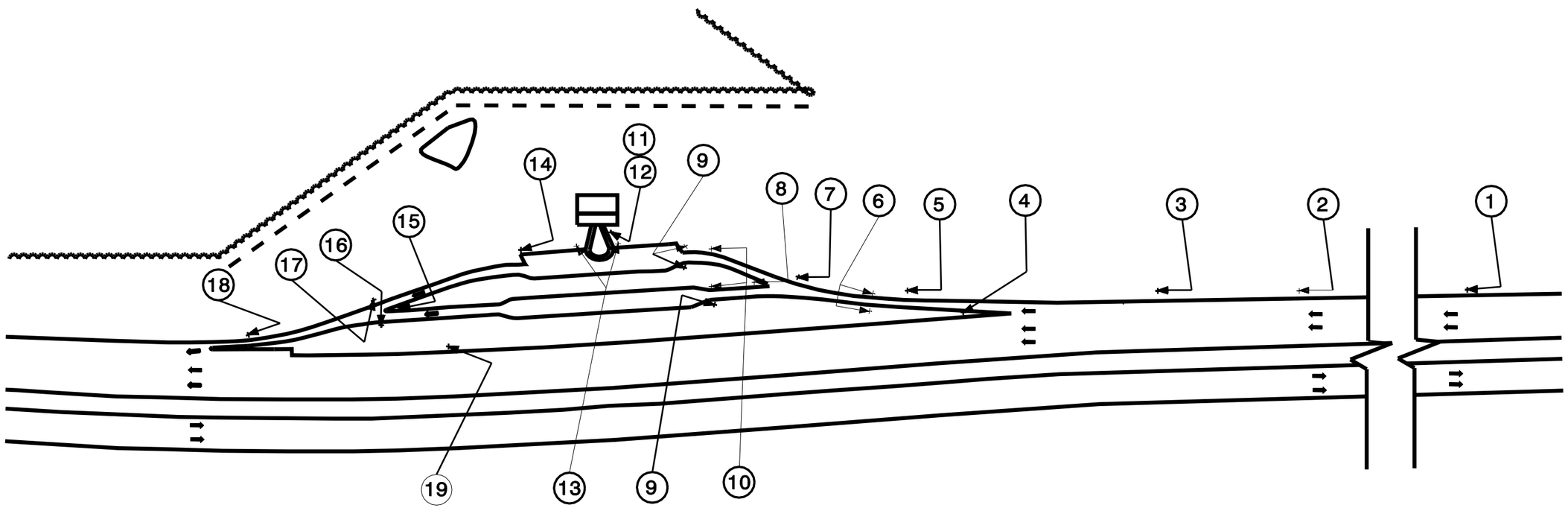

ENGLISH STANDARD DRAWING FOR

TYPICAL SIGNING FOR REST AREAS

SHEET 2 OF 3

STATE OF
NORTH CAROLINA
DEPT. OF TRANSPORTATION
DIVISION OF HIGHWAYS
RALEIGH, N.C.

4-08

ENGLISH STANDARD DRAWING FOR

TYPICAL SIGNING FOR REST AREAS

SHEET 2 OF 3

STATE OF
NORTH CAROLINA
DEPT. OF TRANSPORTATION
DIVISION OF HIGHWAYS
RALEIGH, N.C.

4-08

ENGLISH STANDARD DRAWING FOR

TYPICAL SIGNING FOR TOURIST INFORMATION CENTER OR WELCOME CENTER

SHEET 3 OF 3

1. REST AREA / NORTH CAROLINA WELCOME CENTER 1 MILE — WHITE ON BLUE, D5-9, 162″ x 84″
   OR
   REST AREA / TOURIST INFO CENTER 1 MILE — WHITE ON BLUE, D5-7, 132″ x 84″
   (OPTION) NO OVERNIGHT PARKING — R7-30b, 354″ x 78″
2. REST AREA / NORTH CAROLINA WELCOME CENTER — WHITE ON BLUE, D5-11, 162″ x 84″
   OR
   REST AREA / TOURIST INFO CENTER — WHITE ON BLUE, 132″ X 84″
3. REST AREA — R5-1a, 78″ x 78″
   (OPTION) D9-6
4. WRONG WAY — R 5-1a, 36″ x 24″
5. TRUCKS / CARS WITH TRAILERS / CARS — WHITE ON BLUE, 84″ x 48″
   OR
   TRUCKS / CARS WITH TRAILERS / CARS — WHITE ON BLUE, 84″ x 48″
6. NO OVERNIGHT PARKING — R7-302a, 18″ X 24″
7. CARS WITH TRAILERS PARKING 400 FT — WHITE ON BLUE, 60″ x 18″
   KEEP PETS ON LEASH — M10-19, 12″ x 18″
8. DO NOT ENTER — R5-1, 30″ x 30″
9. CARS WITH TRAILERS PARKING → — WHITE ON BLUE, 60″ x 24″
   RESERVED PARKING / MAXIMUM PENALTY $250 — R7-8E, 12″ x 26″
   PET EXERCISE AREA → — M10-18a R, 15″ x 6″
   (OPTIONAL) VAN ACCESSIBLE — R7-8a OR R7-8b
10. PET EXERCISE AREA → — M10-18a R, 15″ x 6″
11. PET EXERCISE AREA — M10-18a, 15″ x 6″
12. PET EXERCISE ← AREA — M10-18a L, 15″ x 6″
13. RESERVED PARKING / MAXIMUM PENALTY $250 — R7-8E, 12″ x 26″
    (OPTIONAL) VAN ACCESSIBLE — R7-8a OR R7-8b
14. PET EXERCISE AREA → / NO PETS ALLOWED IN BUILDINGS — M10-18R, 15″ x 12″
15. PET EXERCISE ← AREA / NO PETS ALLOWED IN BUILDINGS — M10-18L, 15″ x 12″
16. KEEP PETS ON LEASH — M10-19, 12″ x 18″
17. YIELD — R1-2, 36 X 36 X 36
18. ONE WAY — R6-1L, 54″ x 18″
19. ONE WAY — R6-1R, 54″ x 18″
20. FASTEN SEAT BELTS — M10-20, 24″ x 9″
21. W4-1 (R), 48″ x 48″

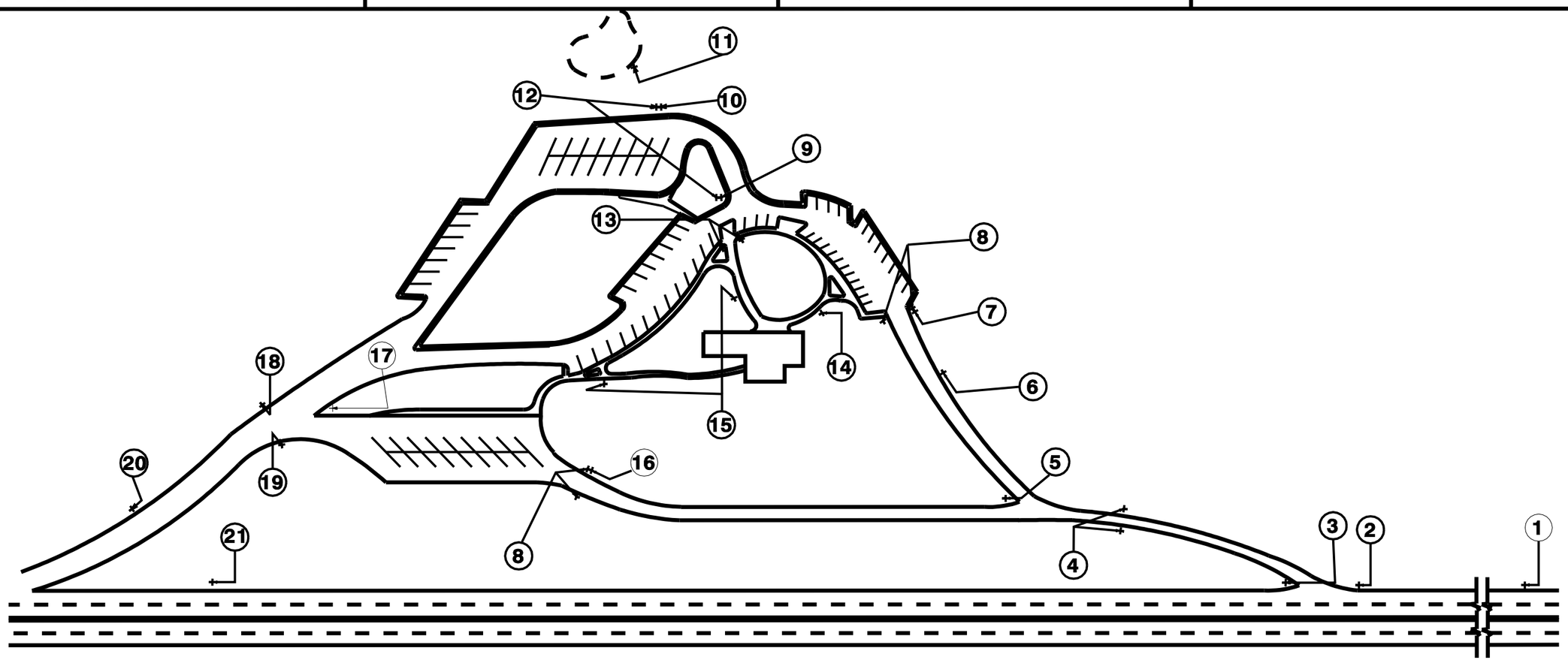

STATE OF
NORTH CAROLINA
DEPT. OF TRANSPORTATION
DIVISION OF HIGHWAYS
RALEIGH, N.C.

4-08

ENGLISH STANDARD DRAWING FOR

TYPICAL SIGNING FOR TOURIST INFORMATION CENTER OR WELCOME CENTER

SHEET 3 OF 3