SIGN NUMBER: SP14037
TYPE: D
QUANTITY: 1

SIGN WIDTH: 2'-0"
HEIGHT: 2'-6"
TOTAL AREA: 5.0 Sq.Ft.

BORDER TYPE: RECESSED
RECESS: 0.38"
WIDTH: 0.63"
RADII: 1.5"

NO. Z BARS:
LENGTH:

BACKG COLOR: White
COPY COLOR: Black

SYMBOL	X	Y	WID	HT

MAT'L: 0.063" (1.6 mm) ALUMINUM

DESIGN BY: MT
PROJECT ID:
CHECKED BY:
DIV: SW
DATE: Feb 18, 2014

USE NOTES: 1,2

1. Legend and border(except those that are colored black) shall be direct applied Grade C sheeting.
2. Background shall be Grade C reflective sheeting.

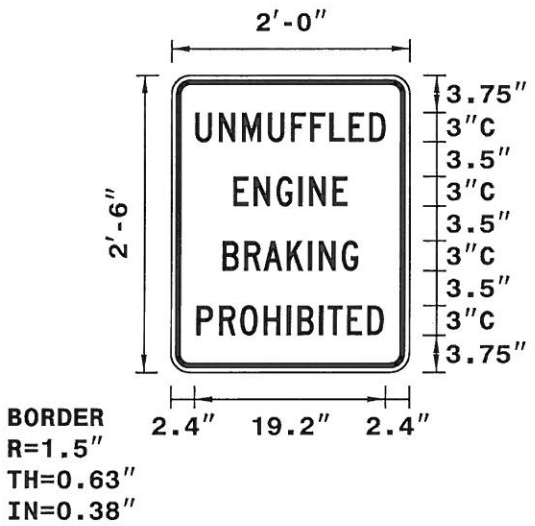

Spacing Factor is 1 unless specified otherwise

LETTER POSITIONS

Letter spacings are to start of next letter

																											Series/Size Text Length
		U	N	M	U	F	F	L	E	D																	C 2000
	2.4	2.3	2.3	2.6	2.3	1.9	1.9	1.9	2	1.7	2.4																19.2
		E	N	G	I	N	E																				C 2000
	6.2	2	2.3	2.3	1.1	2.3	1.5	6.2																			11.6
		B	R	A	K	I	N	G																			C 2000
	5.1	2.2	1.9	2.3	2.2	1.1	2.3	1.7	5.1																		13.7
		P	R	O	H	I	B	I	T	E	D																C 2000
	2.6	2.3	2.1	2.4	2.3	1.1	2.2	0.8	1.9	2	1.7	2.6															18.9

FILENAME: SP14036_DO NOT PASS ON SHOULDER

NORTH CAROLINA D.O.T. SIGN DETAIL

SIGN NUMBER: SP14037a
TYPE: D
QUANTITY: 1

SIGN WIDTH: 3'-0"
HEIGHT: 4'-0"
TOTAL AREA: 12.0 Sq.Ft.

BORDER TYPE: RECESSED
RECESS: 0.63"
WIDTH: 0.88"
RADII: 2.25"

NO. Z BARS:
LENGTH:

BACKG COLOR: White
COPY COLOR: Black

SYMBOL	X	Y	WID	HT

MAT'L: 0.125" (3.2 mm) ALUMINUM

DESIGN BY: MT
PROJECT ID:
CHECKED BY:
DIV: SW
DATE: Feb 25, 2014

USE NOTES: 1,2

1. Legend and border(except those that are colored black) shall be direct applied Grade C sheeting.
2. Background shall be Grade C reflective sheeting.

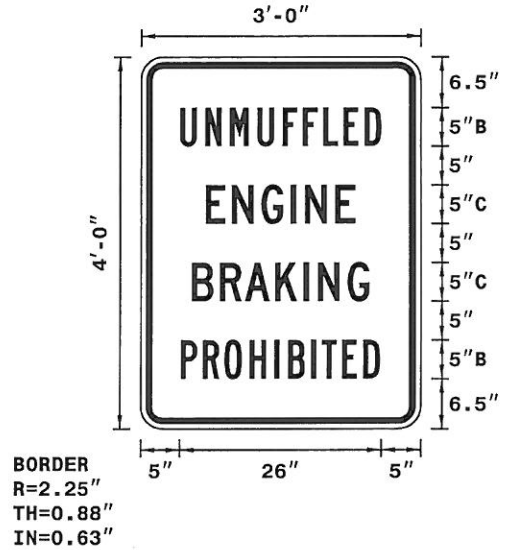

Spacing Factor is 1 unless specified otherwise

LETTER POSITIONS

Letter spacings are to start of next letter

																											Series/Size Text Length
		U	N	M	U	F	F	L	E	D																	B 2000
	5	3.2	3.2	3.6	3.2	2.6	2.6	2.6	2.7	2.2	5																26
		E	N	G	I	N	E																				C 2000
	8.4	3.4	3.8	3.8	1.8	3.9	2.6	8.4																			19.3
		B	R	A	K	I	N	G																			C 2000
	6.6	3.6	3.3	3.9	3.6	1.8	3.8	2.8	6.6																		22.9
		P	R	O	H	I	B	I	T	E	D																B 2000
	5.2	2.9	2.8	3.2	3.3	1.7	3	1.4	2.6	2.7	2.2	5.2															25.7

FILENAME: SP14036_DO NOT PASS ON SHOULDER

NORTH CAROLINA D.O.T. SIGN DETAIL