STATE OF
NORTH CAROLINA
DEPT. OF TRANSPORTATION
DIVISION OF HIGHWAYS
RALEIGH, N.C.

1-02

ENGLISH STANDARD DRAWING FOR

GUARDRAIL END DELINEATION

SHEET 1 OF 1

1262.01

GENERAL NOTES

-GUARDRAIL END DELINEATION IS REQUIRED ON ALL APPROACH AND TRAILING END GUARDRAIL BUFFER END SECTIONS (TEMPORARY AND PERMANENT).

TOP VIEW

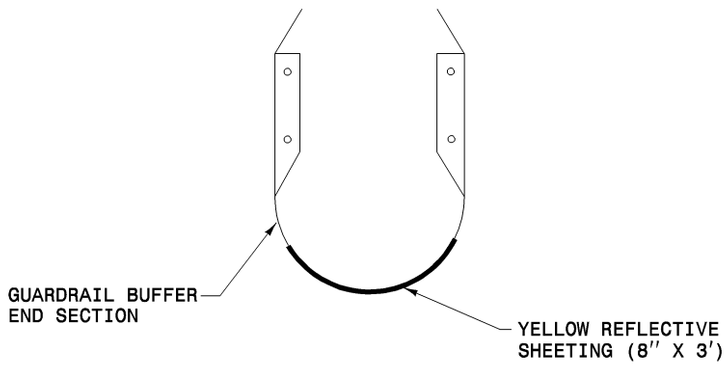

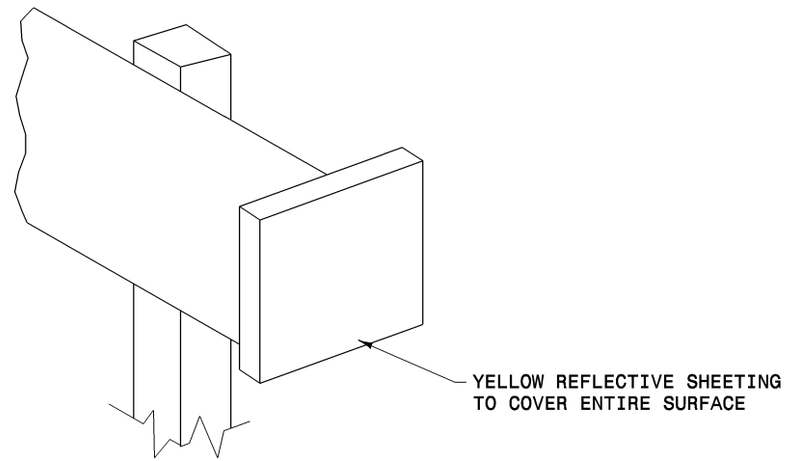

FRONT VIEW

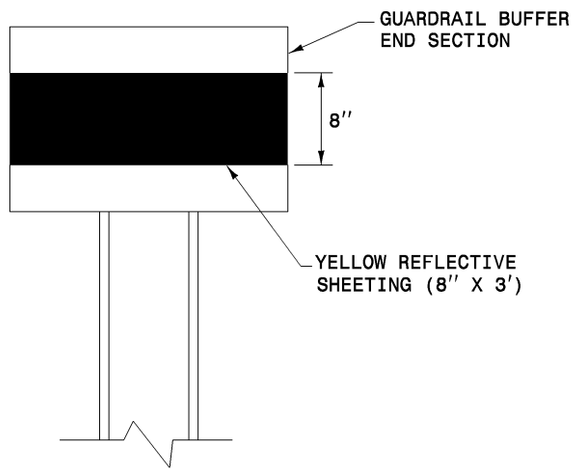

SIDE VIEW

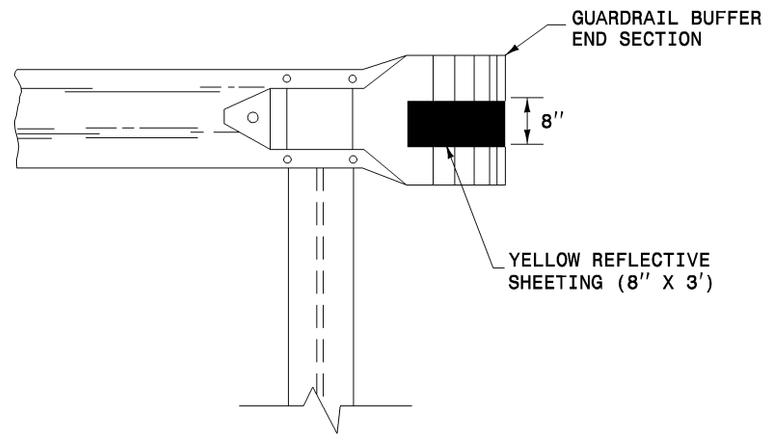

STATE OF
NORTH CAROLINA
DEPT. OF TRANSPORTATION
DIVISION OF HIGHWAYS
RALEIGH, N.C.

1-02

ENGLISH STANDARD DRAWING FOR

GUARDRAIL END DELINEATION

SHEET 1 OF 1

1262.01