TRAFFIC FORECAST COVER LETTER

September 11, 2018

MEMORANDUM TO: Theresa Ellerby, CPM
NCDOT Project Management Unit

FROM: Peter Trencansky, PE, PTOE, AICP
Patriot Transportation Engineering, PLLC

SUBJECT: Traffic Forecast for R-3430
Burke and Caldwell Counties
SR 1001 (Malcolm Blvd/Connelly Springs Rd) Widening to 4-lane Divided

This forecast has been reviewed and approved by the NCDOT Transportation Planning Division as of September 11, 2018.

Please find attached the 2018 and 2045 traffic forecast for STIP Project Number R-3430 in Caldwell and Burke Counties. The proposed project includes widening SR 1001 (Malcolm Blvd/Connelly Springs Rd) to a 4-lane divided facility from US 70 (Burke County) to SR 1933 (Southwest Blvd) (Caldwell County). This forecast was requested for use in the project development activities associated with the project, including the environmental documentation and Preliminary Roadway Design.

This is the first forecast for this project. The project is located within the boundaries of the Greater Hickory Metropolitan Planning Organization (GHMPO). The following three scenarios are provided in this forecast:

- 2018 Base Year No-Build
- 2045 Future Year No-Build
- 2045 Future Year Build (Widening to 4-lane Divided)

Daniel Adams (NCDOT Division 11 Division Traffic Engineer), Steve Cannon (NCDOT Division 13 Division Project Development Engineer), Anna Henderson (Division 13 Division Traffic Engineer), Chad Young (Division 13 District 1 Assistant District Engineer), Brian Horton (Greater Hickory MPO Transportation Planning Manager), Shelley Stevens (Caldwell County Planning Director), and Pam Cook (NCDOT Transportation Planning Division) were consulted during the development of this forecast.

<u>Fiscal Constraint</u>

The project is located within the GHMPO boundaries; therefore, the travel demand model and traffic forecast are fiscally constrained to match the assumptions of the corresponding Metropolitan Transportation Plan (MTP).

The *Greater Hickory Metropolitan Transportation Plan 2045* (2045 MTP) (adopted July 2018) includes the proposed project for Burke and Caldwell Counties and describes it as follows:

- Connelly Springs Road (SR 1001) – Proposed Improvements from Dry Ponds Road (SR 1115 to Southwest Boulevard (SR 1933).

- Malcolm Blvd (SR 1001) – Add capacity to roadway from US 70 in Burke County to just across Catawba River in Caldwell County. The Caldwell County portion of the corridor, also known as Connelly Springs Road (SR 1001), is planned in this MTP by 2035 for widening between just north of the Catawba River to Southwest Boulevard in Lenoir.

The project is identified in the WPCOG Funded Highway Map with the following designations: CALD-HD-6, BURK-HD-2, and MULT-HD-2.

Travel Demand Model

The HickoryNCv1 travel model (provided by NCDOT on 08/03/2018) was the currently approved model at the time this forecast was developed and was utilized as a tool in the development of the forecast.

Forecast Methodology

The 2018 base year no-build traffic volumes and design factors were developed based upon current counts and historic AADT trend projections. The 2045 future year no-build traffic volumes generally included the development of compound annual growth rates based on historic trends, planned development and engineering judgement. The 2045 future year build volumes generally included the development of diversion rates between the different scenarios. The compound annual growth rates or diversion rates were then applied to the AADT volumes from another scenario to develop initial volumes for each scenario. Engineering judgment adjustments were applied as needed in finalizing the volumes in order to develop a balanced forecast.

Interpolation/Extrapolation

To estimate AADT volumes between 2018 and 2045, straight line interpolation between the 2018 and the 2045 scenarios is acceptable. AADT volumes may be extrapolated for up to two years immediately following 2045. If it is determined that any of these assumptions have become inconsistent with the project and surrounding area activity, please request updated projections at this location.

cc: (Final distribution for your records via e-mail as PDF attachments):
James Dunlop, PE, Congestion Management Section (jdunlop@ncdot.gov)
Brenda Moore, PE, CPM, Roadway Design (roadwaydesign@ncdot.gov)
Clark Morrison, PE PhD, Pavement Design (cmorrison@ncdot.gov)
Wayne Atkins, PE, Division 11 Division Project Development Engineer (watkins@ncdot.gov)
Sean Sizemore, Division 11 Planning Engineer (sbsizemore@ncdot.gov)
Steve Cannon, Division 13 Division Project Development Engineer (slcannon@ncdot.gov)
Brian Horton, Greater Hickory MPO Transportation Planning Manager (brian.horton@wpcog.org)
Pam Cook, Transportation Planning Division (prcook@ncdot.gov)
Keith Dixon, State Traffic Forecast Engineer (trafficforecast@ncdot.gov)
Traffic Forecasting GIS Support (trafficforecastinggissupport@ncdot.gov)

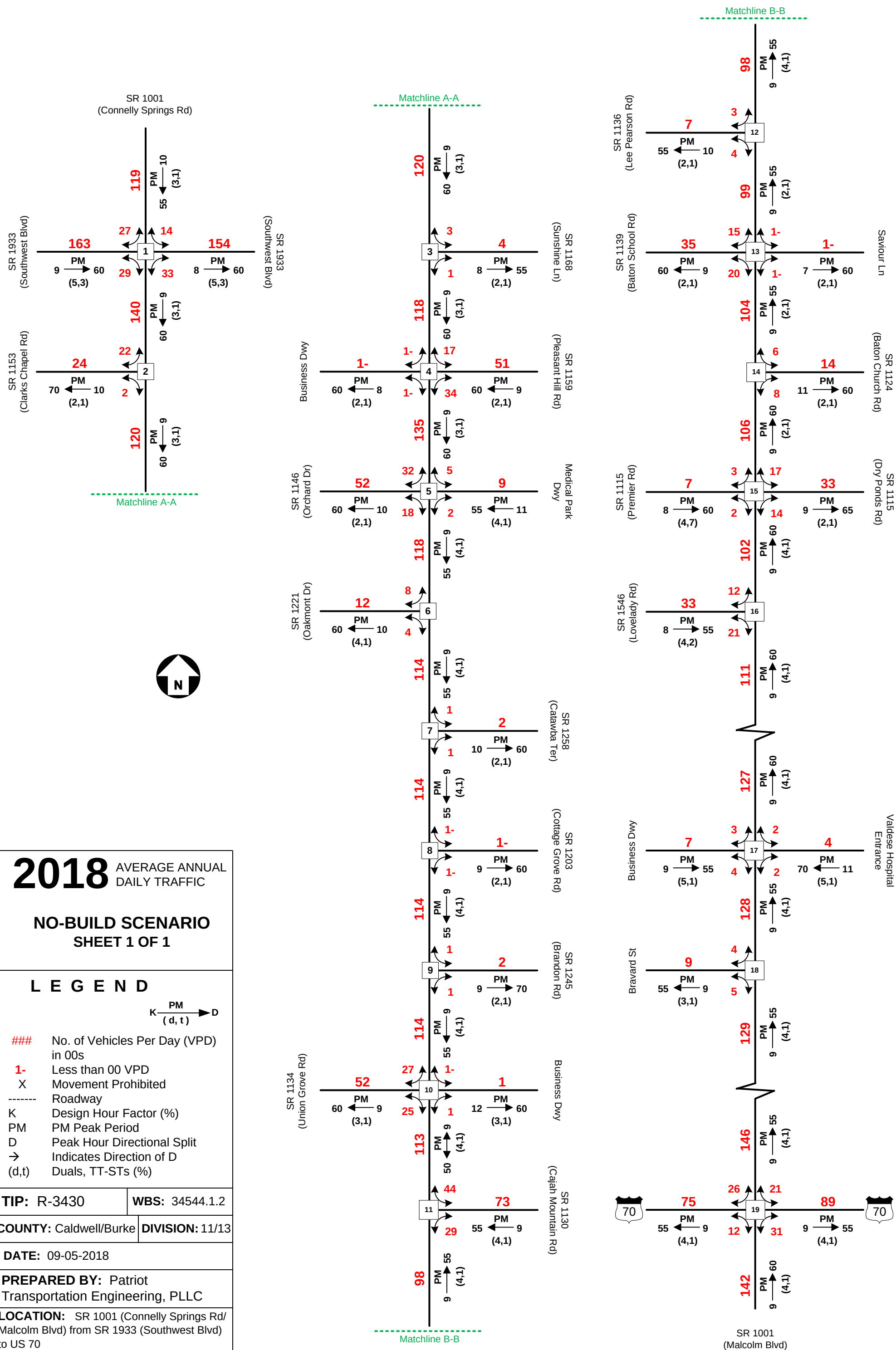

2018 AVERAGE ANNUAL DAILY TRAFFIC

NO-BUILD SCENARIO
SHEET 1 OF 1

L E G E N D

K —PM (d, t)→ D

###	No. of Vehicles Per Day (VPD) in 00s
1-	Less than 00 VPD
X	Movement Prohibited
-------	Roadway
K	Design Hour Factor (%)
PM	PM Peak Period
D	Peak Hour Directional Split
→	Indicates Direction of D
(d,t)	Duals, TT-STs (%)

TIP: R-3430	**WBS:** 34544.1.2
COUNTY: Caldwell/Burke	**DIVISION:** 11/13

DATE: 09-05-2018

PREPARED BY: Patriot Transportation Engineering, PLLC

LOCATION: SR 1001 (Connelly Springs Rd/ Malcolm Blvd) from SR 1933 (Southwest Blvd) to US 70

PROJECT: Widen SR 1001 (Connelly Springs Rd/Malcolm Blvd); 4 lanes, divided

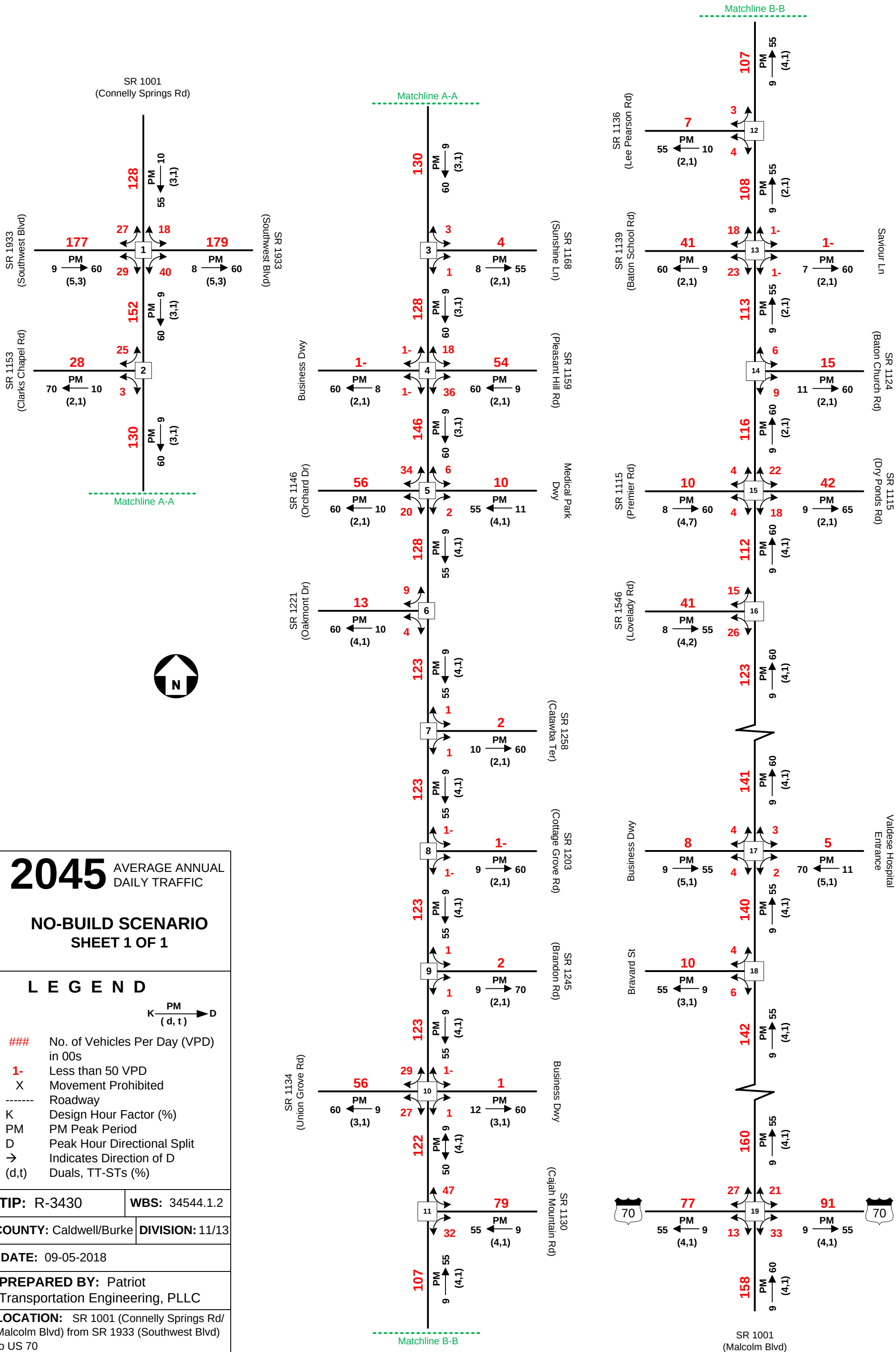

2045 AVERAGE ANNUAL DAILY TRAFFIC

NO-BUILD SCENARIO
SHEET 1 OF 1

L E G E N D

K —PM (d, t)→ D

###	No. of Vehicles Per Day (VPD) in 00s
1-	Less than 50 VPD
X	Movement Prohibited
-------	Roadway
K	Design Hour Factor (%)
PM	PM Peak Period
D	Peak Hour Directional Split
→	Indicates Direction of D
(d,t)	Duals, TT-STs (%)

TIP: R-3430	**WBS:** 34544.1.2
COUNTY: Caldwell/Burke	**DIVISION:** 11/13

DATE: 09-05-2018

PREPARED BY: Patriot Transportation Engineering, PLLC

LOCATION: SR 1001 (Connelly Springs Rd/ Malcolm Blvd) from SR 1933 (Southwest Blvd) to US 70

PROJECT: Widen SR 1001 (Connelly Springs Rd/Malcolm Blvd); 4 lanes, divided

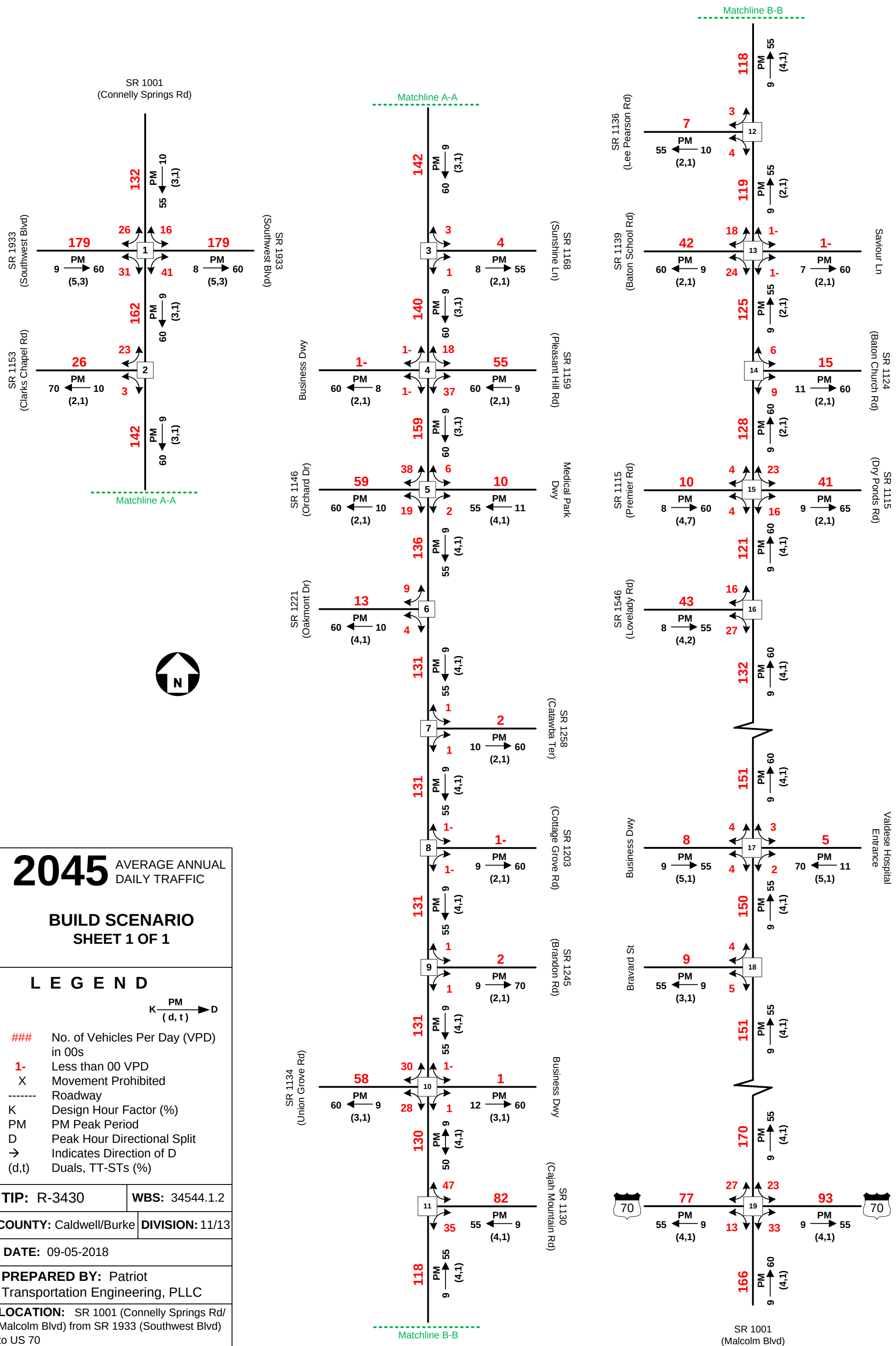

2045 AVERAGE ANNUAL DAILY TRAFFIC

BUILD SCENARIO
SHEET 1 OF 1

L E G E N D

K —PM (d, t)→ D

###	No. of Vehicles Per Day (VPD) in 00s
1-	Less than 00 VPD
X	Movement Prohibited
-------	Roadway
K	Design Hour Factor (%)
PM	PM Peak Period
D	Peak Hour Directional Split
→	Indicates Direction of D
(d,t)	Duals, TT-STs (%)

TIP: R-3430	**WBS:** 34544.1.2
COUNTY: Caldwell/Burke	**DIVISION:** 11/13

DATE: 09-05-2018

PREPARED BY: Patriot Transportation Engineering, PLLC

LOCATION: SR 1001 (Connelly Springs Rd/ Malcolm Blvd) from SR 1933 (Southwest Blvd) to US 70

PROJECT: Widen SR 1001 (Connelly Springs Rd/Malcolm Blvd); 4 lanes, divided