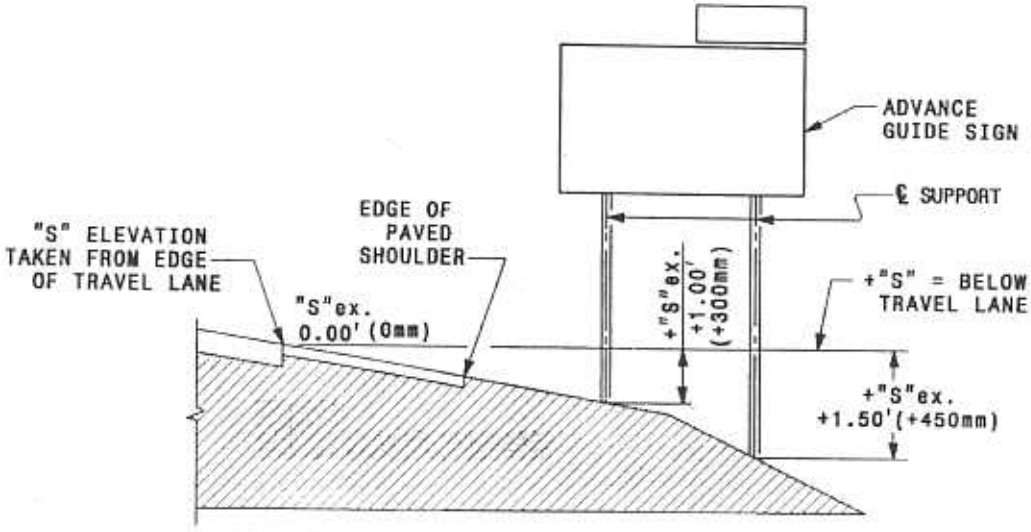

BELOW THE TRAVEL LANE ELEVATION

FRONT VIEW

+"S"	INDICATES POSITIVE DIMENSION
-"S"	INDICATES NEGATIVE DIMENSION

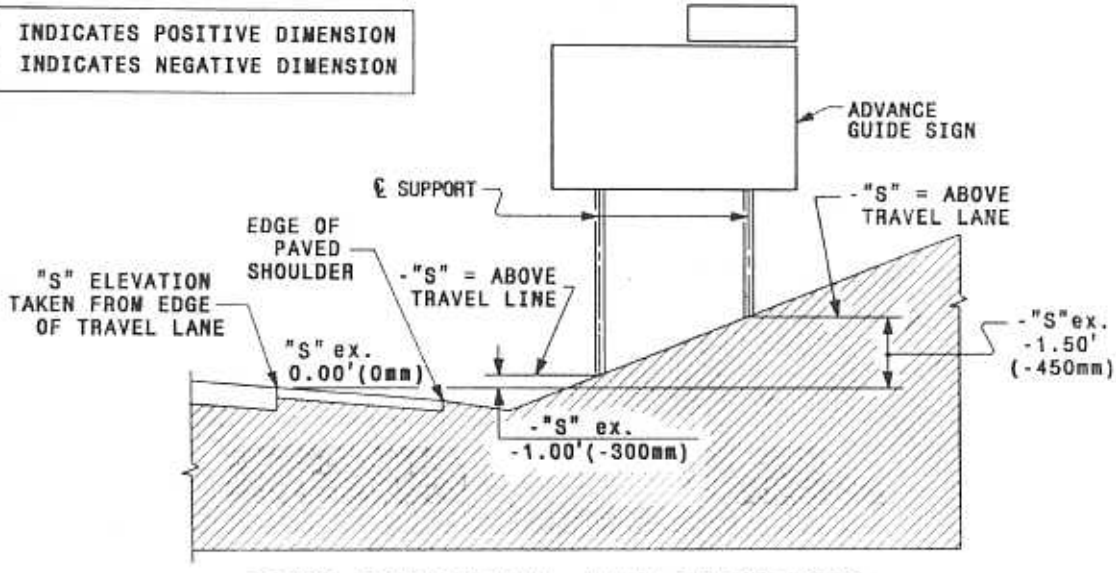

ABOVE THE TRAVEL LANE ELEVATION

FRONT VIEW

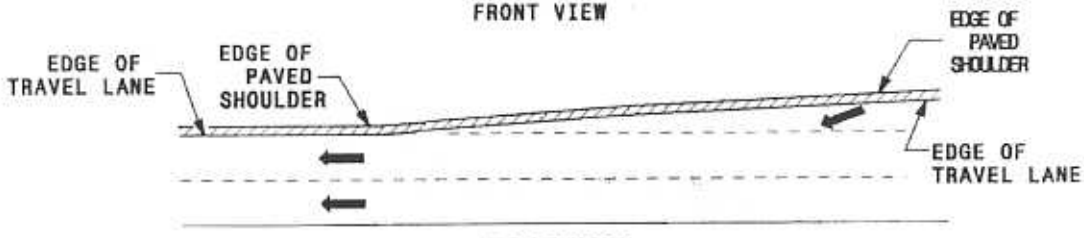

ROADWAY

TOP VIEW

NOTES:

1. MAXIMUM -"S" DISTANCE CAN NOT EXCEED -3.00'(-900mm)
2. FOR GROUND MOUNTED SIGNS THE OFFSET IS FROM THE EDGE OF TRAVEL LANE NOT THE EDGE OF PAVED SHOULDER.

VERIFICATION OF GROUND MOUNTED SIGNS

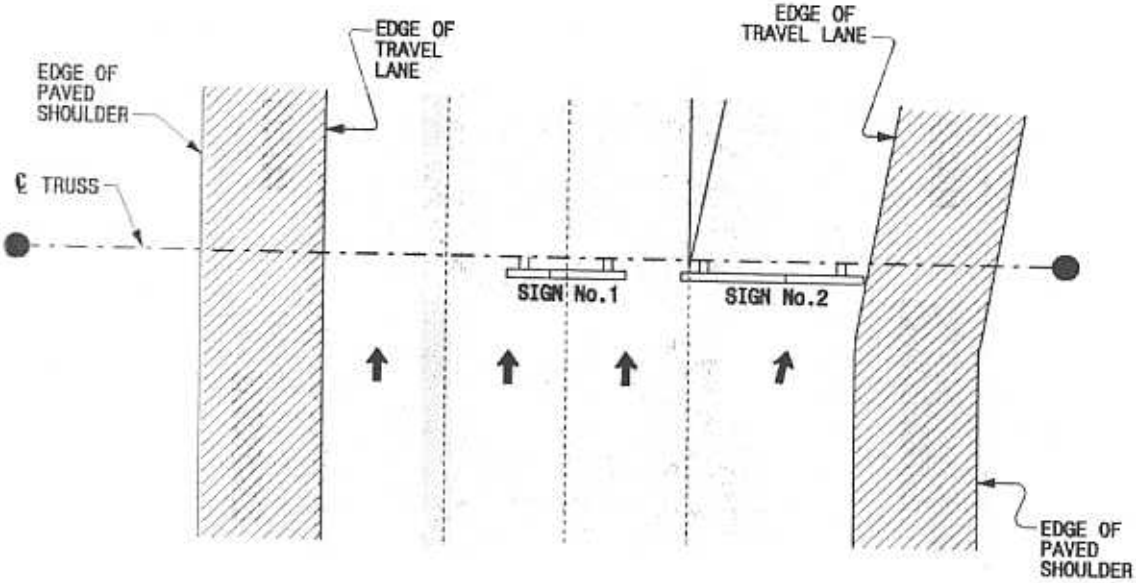

ROADWAY
TOP VIEW

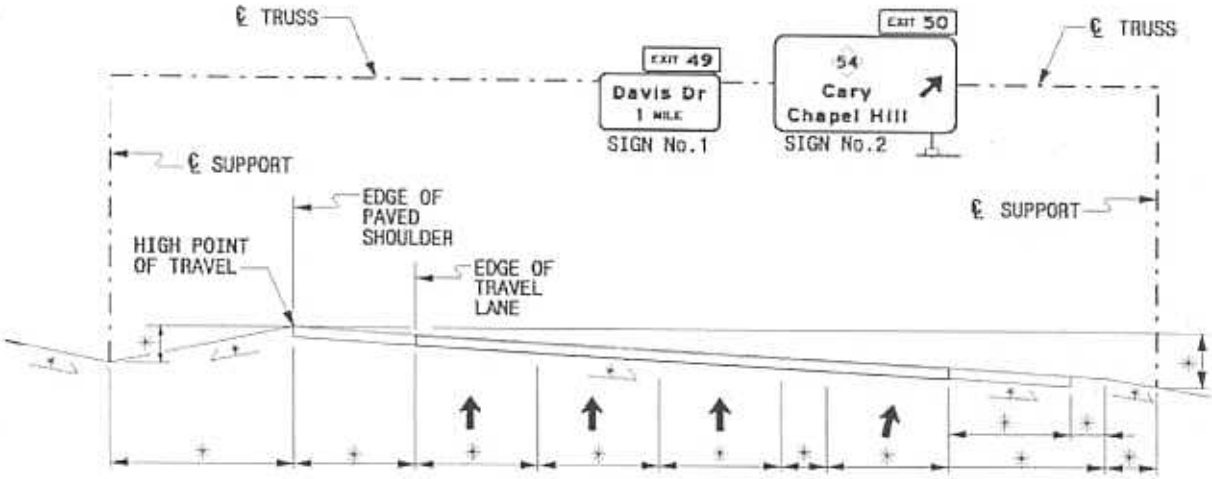

TRAVEL LANE ELEVATION
FRONT VIEW

NOTE
* DIMENSIONS AND SLOPES IDENTIFIED NEED TO BE VERIFIED AND RETURNED TO THE SIGNING SECTION TO COMPLETE SIGNING REVISIONS.

VERIFICATION OF OVERHEAD MOUNTED SIGNS

STATE OF NORTH CAROLINA
DEPARTMENT OF TRANSPORTATION

TRAFFIC ENGINEERING
SIGNING SECTION
1592 MAIL SERVICE CENTER
RALEIGH, NORTH CAROLINA 27699-1592

PROJECT _____ BREAKAWAY/SIMPLE _____
COUNTY _____ RIGHT/LEFT _____
SIGN No. _____ FIGURED BY _____
STA.No. _____ CHECKED BY _____

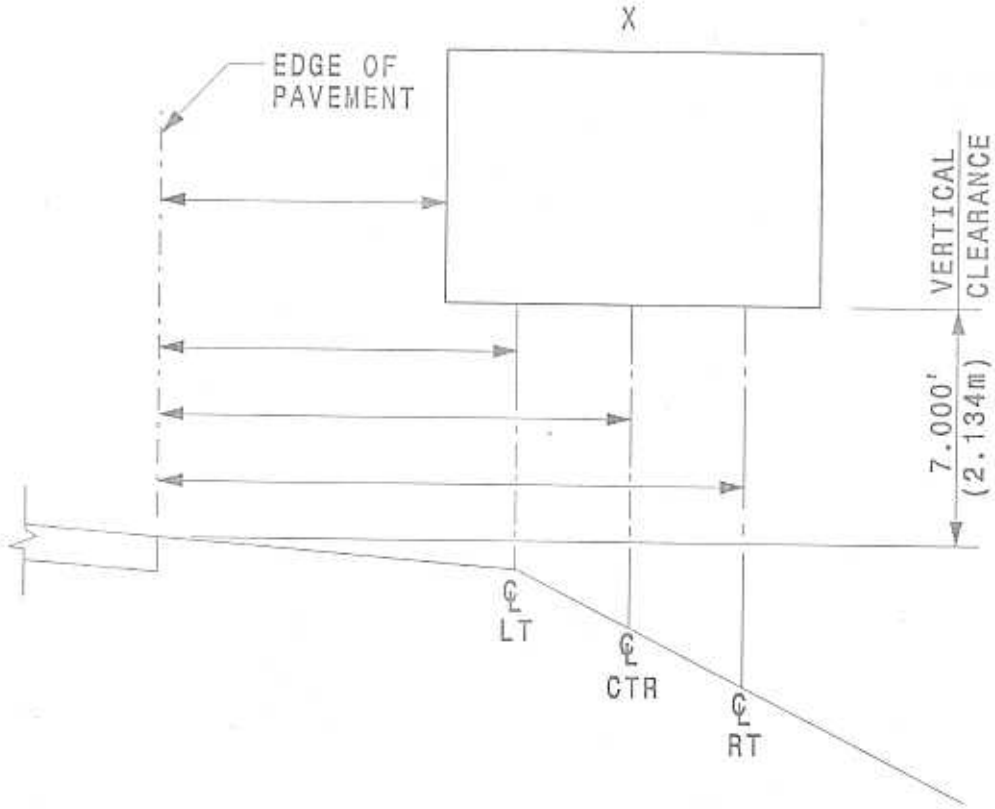

STATE OF NORTH CAROLINA
DEPARTMENT OF TRANSPORTATION

TRAFFIC ENGINEERING
SIGNING SECTION
1592 MAIL SERVICE CENTER
RALEIGH, NORTH CAROLINA 27699-1592
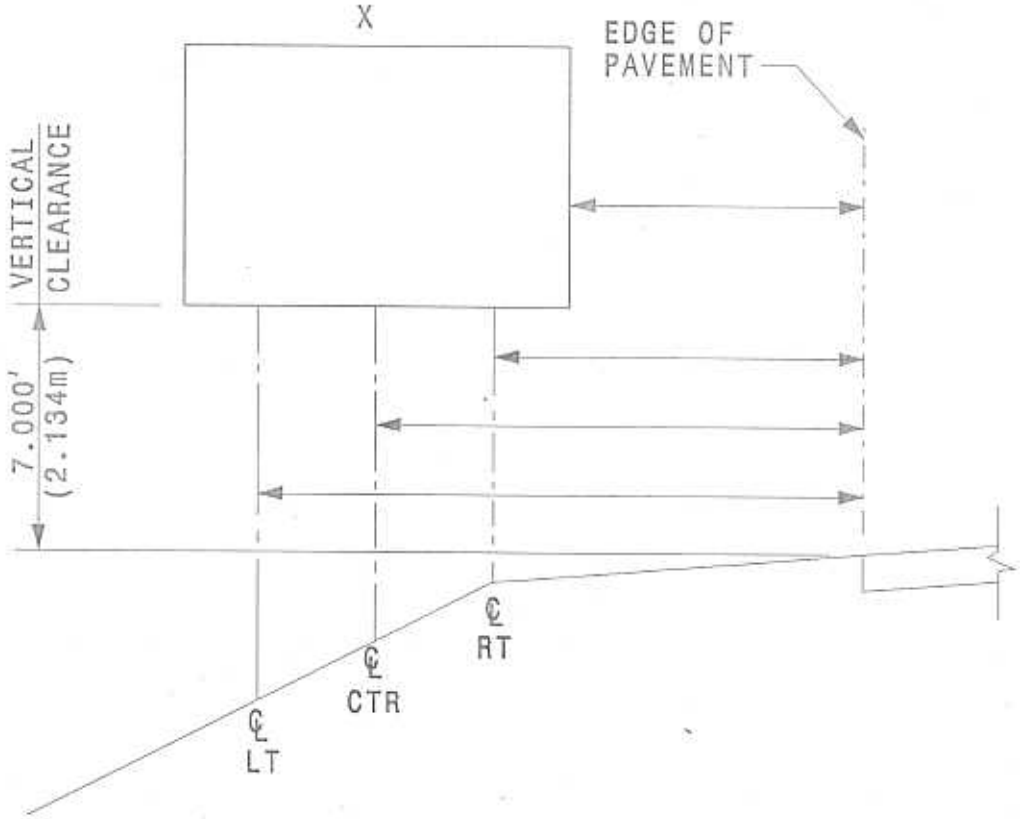
PROJECT _____ BREAKAWAY/SIMPLE _____
COUNTY _____ RIGHT/LEFT _____
SIGN No. _____ FIGURED BY _____
STA.No. _____ CHECKED BY _____