Type of peak hour being reported: Intersection Peak

Method for determining peak hour: Total Entering Volume

LOCATION: Derita Rd -- Westmoreland Dr NW
CITY/STATE: Concord, NC

QC JOB #: 11369703
DATE: Thu, Jan 09 2014

Peak-Hour: 7:30 AM -- 8:30 AM
Peak 15-Min: 7:45 AM -- 8:00 AM

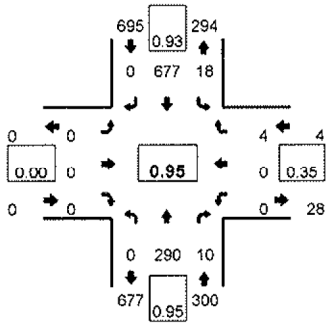

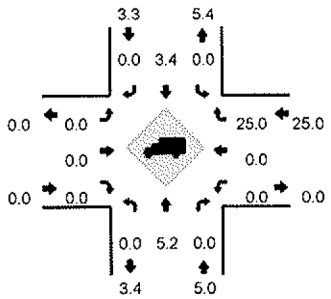

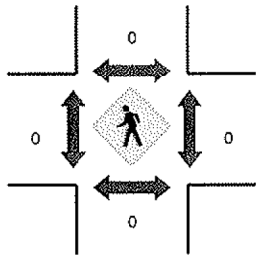

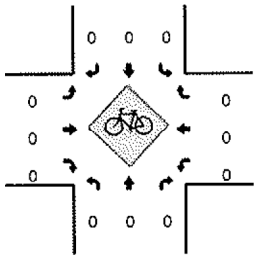

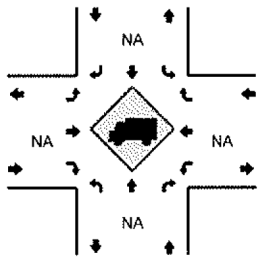

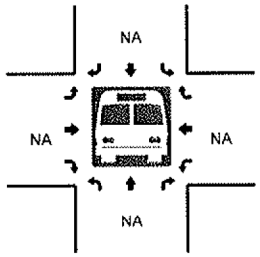

15-Min Count Period Beginning At	Derita Rd (Northbound)				Derita Rd (Southbound)				Westmoreland Dr NW (Eastbound)				Westmoreland Dr NW (Westbound)				Total	Hourly Totals
	Left	Thru	Right	U	Left	Thru	Right	U	Left	Thru	Right	U	Left	Thru	Right	U		
7:00 AM	0	48	1	0	7	145	0	0	0	0	0	0	0	0	1	0	202	
7:15 AM	0	54	1	0	8	136	0	0	0	0	0	0	0	0	0	0	199	
7:30 AM	0	68	1	0	7	159	0	0	0	0	0	0	0	0	2	0	237	
7:45 AM	0	76	3	0	3	179	0	0	0	0	0	0	0	0	2	0	263	901
8:00 AM	0	73	2	0	5	181	0	0	0	0	0	0	0	0	0	0	261	960
8:15 AM	0	73	4	0	3	158	0	0	0	0	0	0	0	0	0	0	238	999
8:30 AM	0	60	0	0	7	126	0	0	0	0	0	0	0	0	2	0	195	957
8:45 AM	0	38	2	0	5	85	0	0	0	0	0	0	3	0	2	0	135	829

Peak 15-Min Flowrates	Northbound				Southbound				Eastbound				Westbound				Total
	Left	Thru	Right	U	Left	Thru	Right	U	Left	Thru	Right	U	Left	Thru	Right	U	
All Vehicles	0	304	12	0	12	716	0	0	0	0	0	0	0	0	8	0	1052
Heavy Trucks	0	8	0		0	20	0		0	0	0		0	0	4		32
Pedestrians		0				0				0				0			0
Bicycles	0	0	0		0	0	0		0	0	0		0	0	0		0
Railroad																	
Stopped Buses																	

Comments:

Report generated on 1/10/2014 12:48 PM

SOURCE: Quality Counts, LLC (http://www.qualitycounts.net) 1-877-580-2212

Type of peak hour being reported: Intersection Peak

Method for determining peak hour: Total Entering Volume

LOCATION: Derita Rd -- Westmoreland Dr NW
CITY/STATE: Concord, NC

QC JOB #: 11369704
DATE: Tue, Jan 07 2014

Peak-Hour: 5:00 PM -- 6:00 PM
Peak 15-Min: 5:00 PM -- 5:15 PM

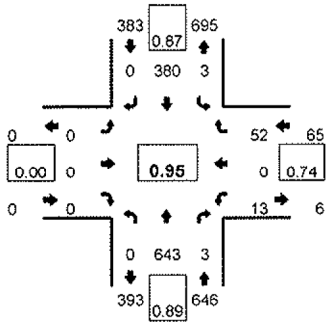

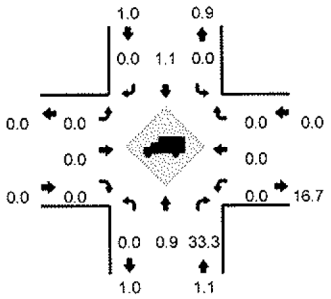

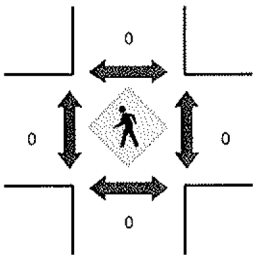

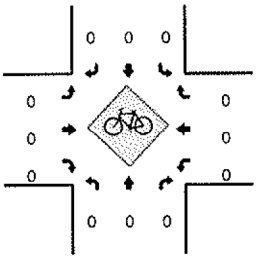

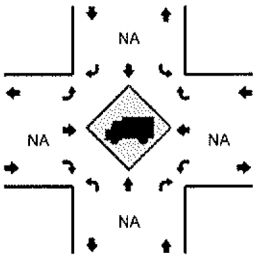

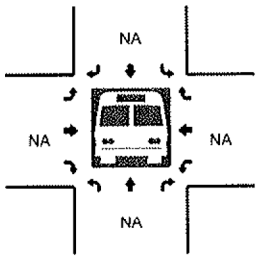

15-Min Count Period Beginning At	Derita Rd (Northbound)				Derita Rd (Southbound)				Westmoreland Dr NW (Eastbound)				Westmoreland Dr NW (Westbound)				Total	Hourly Totals
	Left	Thru	Right	U	Left	Thru	Right	U	Left	Thru	Right	U	Left	Thru	Right	U		
4:00 PM	0	115	1	0	1	54	0	0	0	0	0	0	3	0	23	0	197	
4:15 PM	0	110	2	0	0	66	0	0	0	0	0	0	4	0	16	0	198	
4:30 PM	0	162	2	0	2	74	0	0	0	0	0	0	8	0	21	0	269	
4:45 PM	0	168	0	0	1	73	0	0	0	0	0	0	3	0	8	0	253	917
5:00 PM	0	178	1	0	1	83	0	0	0	0	0	0	5	0	21	0	289	1009
5:15 PM	0	124	0	0	0	104	0	0	0	0	0	0	2	0	9	0	239	1050
5:30 PM	0	184	1	0	0	85	0	0	0	0	0	0	3	0	12	0	285	1066
5:45 PM	0	157	1	0	2	108	0	0	0	0	0	0	3	0	10	0	281	1094

Peak 15-Min Flowrates	Northbound				Southbound				Eastbound				Westbound				Total
	Left	Thru	Right	U	Left	Thru	Right	U	Left	Thru	Right	U	Left	Thru	Right	U	
All Vehicles	0	712	4	0	4	332	0	0	0	0	0	0	20	0	84	0	1156
Heavy Trucks	0	0	0		0	0	0		0	0	0		0	0	0		0
Pedestrians		0				0				0				0			0
Bicycles	0	0	0		0	0	0		0	0	0		0	0	0		0
Railroad																	
Stopped Buses																	

Comments:

Report generated on 1/10/2014 12:48 PM

SOURCE: Quality Counts, LLC (http://www.qualitycounts.net) 1-877-580-2212