Short Counts

735 Maryland St.
Columbia, SC 29201
You Can Count On Us!

File Name : Not Named 1
Site Code : 00000000
Start Date : 3/16/2015
Page No : 3

	Airport Rd Southbound					Weddington Rd Westbound					Northbound					Weddington Rd Eastbound					
Start Time	Left	Thru	Right	Peds	App. Total	Left	Thru	Right	Peds	App. Total	Left	Thru	Right	Peds	App. Total	Left	Thru	Right	Peds	App. Total	Int. Total
Peak Hour Analysis From 07:00 to 08:45 - Peak 1 of 1																					
Peak Hour for Entire Intersection Begins at 07:00																					
07:00	1	0	**44**	0	45	0	**122**	13	0	**135**	0	0	0	0	0	39	61	0	0	100	280
07:15	8	0	28	0	36	0	88	24	0	112	0	0	0	0	0	58	88	0	0	146	294
07:30	9	0	28	0	37	0	98	**33**	0	131	0	0	0	0	0	**77**	**99**	0	0	**176**	**344**
07:45	**15**	0	38	0	**53**	0	91	13	0	104	0	0	0	0	0	65	71	1	0	137	294
Total Volume	33	0	138	0	171	0	399	83	0	482	0	0	0	0	0	239	319	1	0	559	1212
% App. Total	19.3	0	80.7	0		0	82.8	17.2	0		0	0	0	0		42.8	57.1	0.2	0		
PHF	.550	.000	.784	.000	.807	.000	.818	.629	.000	.893	.000	.000	.000	.000	.000	.776	.806	.250	.000	.794	.881

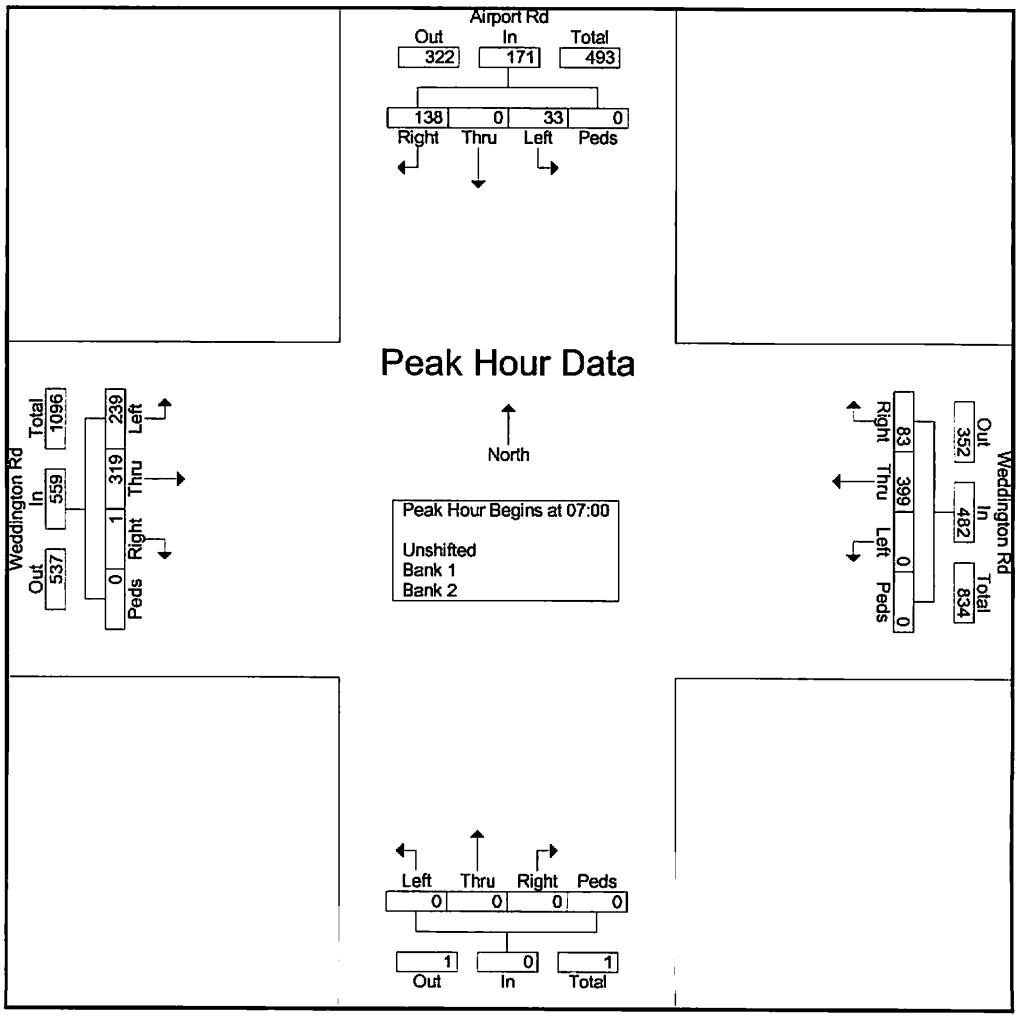

Short Counts

735 Maryland St.
Columbia, SC 29201
You Can Count On Us!

File Name : Not Named 1
Site Code : 00000000
Start Date : 3/16/2015
Page No : 4
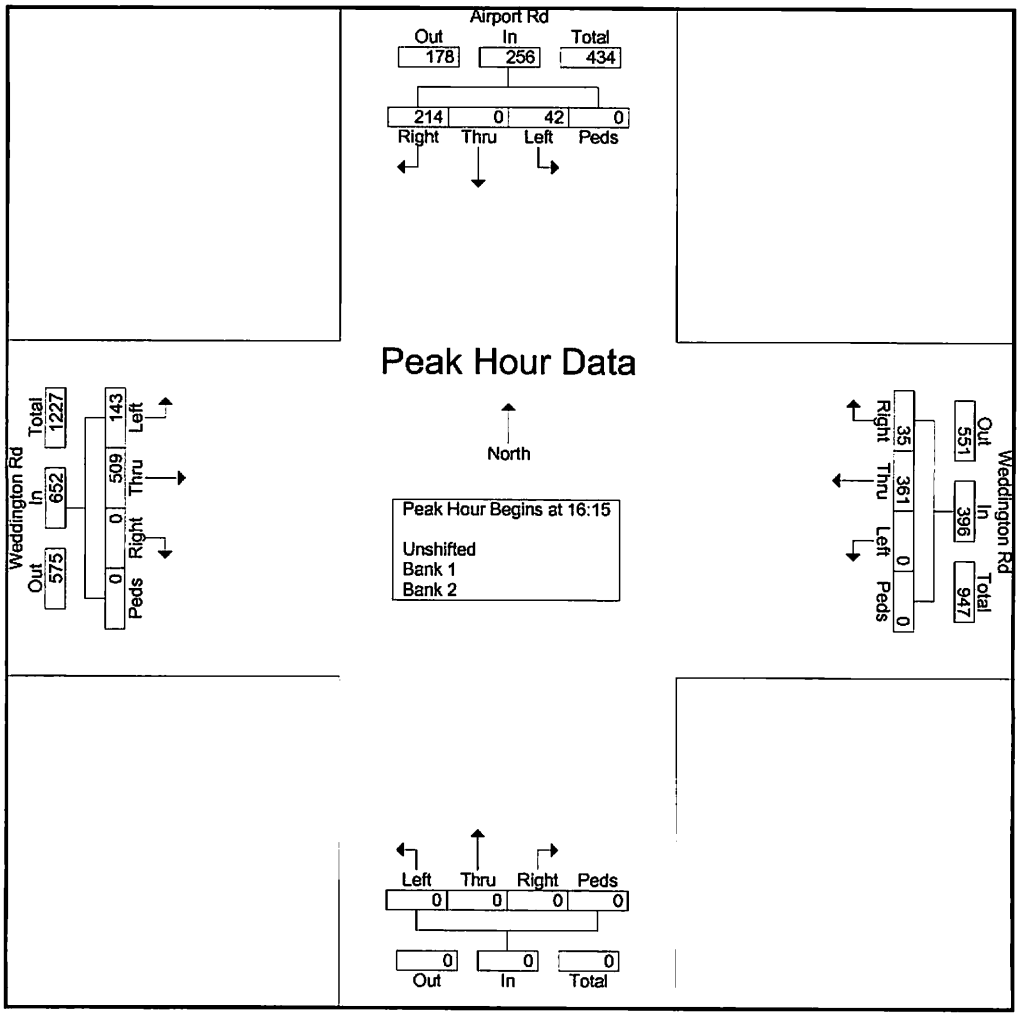
	Airport Rd Southbound					Weddington Rd Westbound					Northbound					Weddington Rd Eastbound					
Start Time	Left	Thru	Right	Peds	App. Total	Left	Thru	Right	Peds	App. Total	Left	Thru	Right	Peds	App. Total	Left	Thru	Right	Peds	App. Total	Int. Total
Peak Hour Analysis From 16:00 to 17:45 - Peak 1 of 1																					
Peak Hour for Entire Intersection Begins at 16:15																					
16:15	11	0	48	0	59	0	82	**17**	0	99	0	0	0	0	0	27	**138**	0	0	165	323
16:30	**13**	0	**64**	0	**77**	0	**106**	10	0	**116**	0	0	0	0	0	**42**	111	0	0	153	**346**
16:45	10	0	51	0	61	0	91	4	0	95	0	0	0	0	0	39	128	0	0	**167**	323
17:00	8	0	51	0	59	0	82	4	0	86	0	0	0	0	0	35	132	0	0	167	312
Total Volume	42	0	214	0	256	0	361	35	0	396	0	0	0	0	0	143	509	0	0	652	1304
% App. Total	16.4	0	83.6	0		0	91.2	8.8	0		0	0	0	0		21.9	78.1	0	0		
PHF	.808	.000	.836	.000	.831	.000	.851	.515	.000	.853	.000	.000	.000	.000	.000	.851	.922	.000	.000	.976	.942