RAMEY KEMP & ASSOCIATES
TRANSPORTATION ENGINEERS

5808 Faringdon Place, Suite 100
Raleigh, NC 27609
PH: 919 872-5115
FX: 919 878-5416

File Name : 15035.07 Sonic Driveway-Boat Storage Driveway and US 70 Friday PM
Site Code : 08072015
Start Date : 8/7/2015
Page No : 1

Groups Printed- Cars/Trucks

	Boat Storage Southbound				US 70 Westbound				Sonic Driveway Northbound				US 70 Eastbound						
Start Time	Right	Thru	Left	Trks	Right	Thru	Left	Trks	Right	Thru	Left	Trks	Right	Thru	Left	Trks	Exclu. Total	Inclu. Total	Int. Total
06:00 PM	0	0	1	0	0	0	1	0	1	0	0	0	2	0	0	0	0	5	5
06:15 PM	2	0	0	0	1	0	1	0	3	0	0	0	0	0	3	0	0	10	10
06:30 PM	1	0	1	0	0	0	0	0	4	0	1	0	1	0	0	0	0	8	8
06:45 PM	3	0	1	0	0	0	1	0	1	0	0	0	2	0	0	0	0	8	8
Total	6	0	3	0	1	0	3	0	9	0	1	0	5	0	3	0	0	31	31
07:00 PM	0	0	0	0	1	0	1	0	1	0	0	0	1	0	0	0	0	4	4
07:15 PM	0	0	0	0	0	0	0	0	3	0	1	0	4	0	0	0	0	8	8
07:30 PM	0	0	1	0	0	0	1	0	1	0	0	0	1	0	1	0	0	5	5
07:45 PM	0	0	0	0	1	0	0	0	2	0	0	0	2	0	1	0	0	6	6
Total	0	0	1	0	2	0	2	0	7	0	1	0	8	0	2	0	0	23	23
Grand Total	6	0	4	0	3	0	5	0	16	0	2	0	13	0	5	0	0	54	54
Apprch %	60	0	40		37.5	0	62.5		88.9	0	11.1		72.2	0	27.8				
Total %	11.1	0	7.4		5.6	0	9.3		29.6	0	3.7		24.1	0	9.3		0	100	

RAMEY KEMP & ASSOCIATES
TRANSPORTATION ENGINEERS

5808 Faringdon Place, Suite 100
Raleigh, NC 27609
PH: 919 872-5115
FX: 919 878-5416

File Name : 15035.07 Sonic Driveway-Boat Storage Driveway and US 70 Friday PM
Site Code : 08072015
Start Date : 8/7/2015
Page No : 2

	Boat Storage Southbound				US 70 Westbound				Sonic Driveway Northbound				US 70 Eastbound				
Start Time	Right	Thru	Left	App. Total	Right	Thru	Left	App. Total	Right	Thru	Left	App. Total	Right	Thru	Left	App. Total	Int. Total
Peak Hour Analysis From 06:00 PM to 07:45 PM - Peak 1 of 1																	
Peak Hour for Entire Intersection Begins at 06:00 PM																	
06:00 PM	0	0	**1**	1	0	0	**1**	1	1	0	0	1	**2**	0	0	2	5
06:15 PM	2	0	0	2	**1**	0	1	**2**	3	0	0	3	0	0	**3**	**3**	**10**
06:30 PM	1	0	1	2	0	0	0	0	**4**	0	**1**	**5**	1	0	0	1	8
06:45 PM	**3**	0	1	**4**	0	0	1	1	1	0	0	1	2	0	0	2	8
Total Volume	6	0	3	9	1	0	3	4	9	0	1	10	5	0	3	8	31
% App. Total	66.7	0	33.3		25	0	75		90	0	10		62.5	0	37.5		
PHF	.500	.000	.750	.563	.250	.000	.750	.500	.563	.000	.250	.500	.625	.000	.250	.667	.775

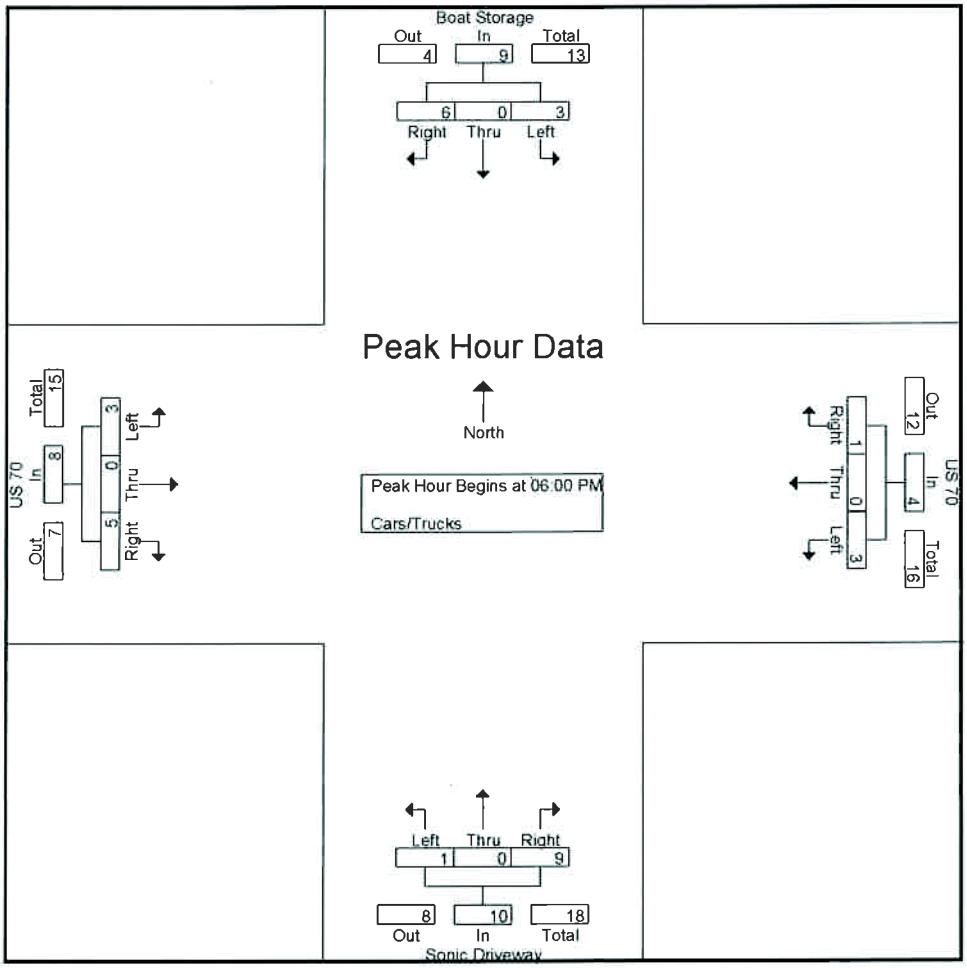

RAMEY KEMP & ASSOCIATES
TRANSPORTATION ENGINEERS

5808 Faringdon Place, Suite 100
Raleigh, NC 27609
PH: 919 872-5115
FX: 919 878-5416

File Name : 15035.07 Sonic Driveway-Boat Storage Driveway and US 70 Friday PM
Site Code : 08072015
Start Date : 8/7/2015
Page No : 1

Groups Printed- Turns

	Boat Storage Southbound				US 70 Westbound				Sonic Driveway Northbound				US 70 Eastbound						
Start Time	Right	Thru	Left	Trks	Right	Thru	Left	Trks	Right	Thru	Left	Trks	Right	Thru	Left	Trks	Exclu. Total	Inclu. Total	Int. Total
*** BREAK ***																			
06:15 PM	0	0	0	0	0	0	0	0	0	0	0	0	0	0	1	0	0	1	1
*** BREAK ***																			
06:45 PM	0	0	0	0	0	0	0	0	0	0	0	0	0	0	2	0	0	2	2
Total	0	0	0	0	0	0	0	0	0	0	0	0	0	0	3	0	0	3	3
*** BREAK ***																			
07:45 PM	0	0	0	0	0	0	1	0	0	0	0	0	0	0	3	0	0	4	4
Total	0	0	0	0	0	0	1	0	0	0	0	0	0	0	3	0	0	4	4
Grand Total	0	0	0	0	0	0	1	0	0	0	0	0	0	0	6	0	0	7	7
Apprch %	0	0	0		0	0	100		0	0	0		0	0	100				
Total %	0	0	0		0	0	14.3		0	0	0		0	0	85.7		0	100	

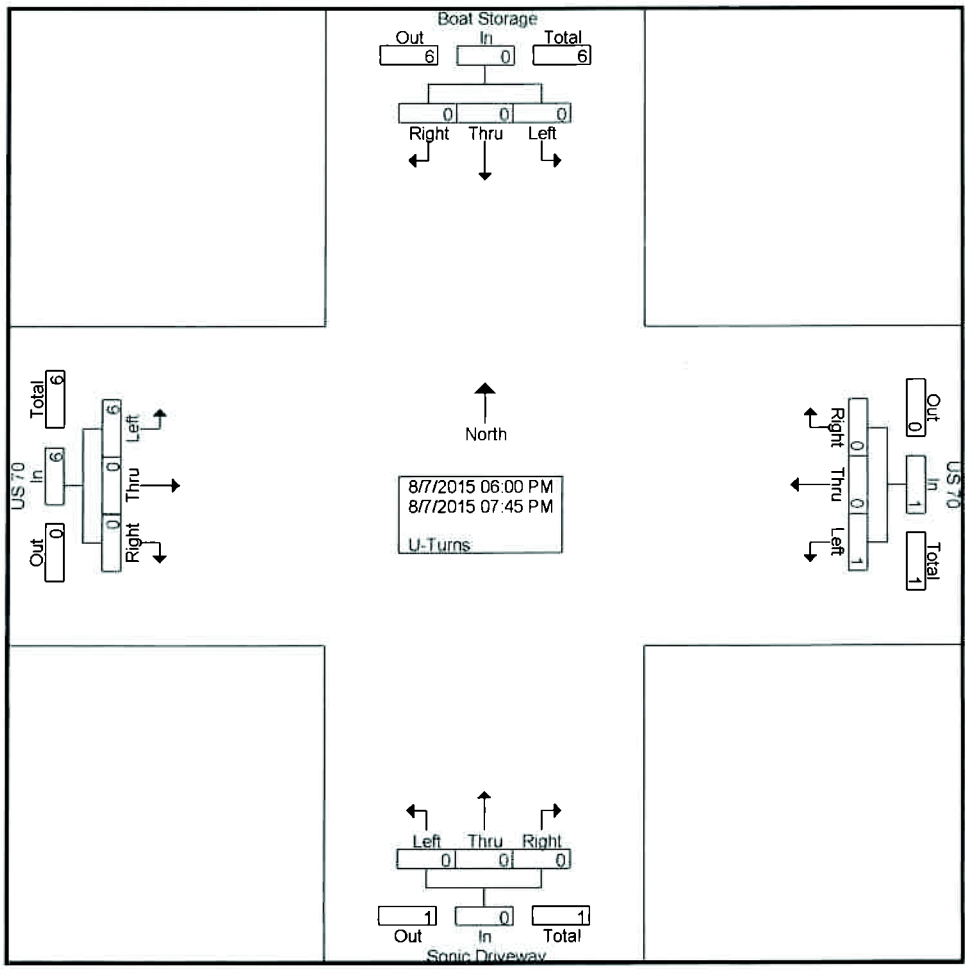

RAMEY KEMP & ASSOCIATES
TRANSPORTATION ENGINEERS

5808 Faringdon Place, Suite 100
Raleigh, NC 27609
PH: 919 872-5115
FX: 919 878-5416

File Name : 15035.07 Sonic Driveway-Boat Storage Driveway and US 70 Sat. Midday
Site Code : 08082015
Start Date : 8/8/2015
Page No : 1

Groups Printed- Cars/Trucks

	Boat Storage Southbound				US 70 Westbound				Sonic Driveway Northbound				US 70 Eastbound						
Start Time	Right	Thru	Left	Trks	Right	Thru	Left	Trks	Right	Thru	Left	Trks	Right	Thru	Left	Trks	Exclu. Total	Inclu. Total	Int. Total
11:00 AM	1	0	0	0	0	0	2	0	0	0	0	0	2	0	1	0	0	6	6
11:15 AM	2	0	0	0	0	0	1	0	4	0	0	0	0	0	2	0	0	9	9
11:30 AM	2	0	1	0	1	0	2	0	2	0	1	0	1	0	0	0	0	10	10
11:45 AM	2	0	0	0	1	0	1	0	2	0	0	0	3	0	0	0	0	9	9
Total	7	0	1	0	2	0	6	0	8	0	1	0	6	0	3	0	0	34	34
12:00 PM	3	0	1	0	3	0	1	0	6	0	0	0	1	0	2	0	0	17	17
12:15 PM	5	0	0	0	2	0	2	0	4	0	1	0	5	0	1	0	0	20	20
12:30 PM	2	0	1	0	0	0	2	0	6	0	0	0	5	0	1	0	0	17	17
12:45 PM	2	0	1	0	1	0	1	0	7	0	0	0	4	0	0	0	0	16	16
Total	12	0	3	0	6	0	6	0	23	0	1	0	15	0	4	0	0	70	70
01:00 PM	1	0	0	0	1	0	1	0	1	0	0	0	0	0	2	0	0	6	6
01:15 PM	1	0	1	0	0	0	0	0	2	0	0	0	2	0	2	0	0	8	8
01:30 PM	1	0	0	0	0	0	0	0	0	0	1	0	3	0	2	0	0	7	7
01:45 PM	2	0	3	0	1	0	2	0	2	0	0	0	2	0	3	0	0	15	15
Total	5	0	4	0	2	0	3	0	5	0	1	0	7	0	9	0	0	36	36
Grand Total	24	0	8	0	10	0	15	0	36	0	3	0	28	0	16	0	0	140	140
Apprch %	75	0	25		40	0	60		92.3	0	7.7		63.6	0	36.4				
Total %	17.1	0	5.7		7.1	0	10.7		25.7	0	2.1		20	0	11.4		0	100	

RAMEY KEMP & ASSOCIATES
TRANSPORTATION ENGINEERS

5808 Faringdon Place, Suite 100
Raleigh, NC 27609
PH: 919 872-5115
FX: 919 878-5416

File Name : 15035.07 Sonic Driveway-Boat Storage Driveway and US 70 Sat. Midday
Site Code : 08082015
Start Date : 8/8/2015
Page No : 2

	Boat Storage Southbound				US 70 Westbound				Sonic Driveway Northbound				US 70 Eastbound				
Start Time	Right	Thru	Left	App. Total	Right	Thru	Left	App. Total	Right	Thru	Left	App. Total	Right	Thru	Left	App. Total	Int. Total
Peak Hour Analysis From 11:00 AM to 01:45 PM - Peak 1 of 1																	
Peak Hour for Entire Intersection Begins at 12:00 PM																	
12:00 PM	3	0	1	4	3	0	1	4	6	0	0	6	1	0	2	3	17
12:15 PM	5	0	0	5	2	0	2	4	4	0	1	5	5	0	1	6	20
12:30 PM	2	0	1	3	0	0	2	2	6	0	0	6	5	0	1	6	17
12:45 PM	2	0	1	3	1	0	1	2	7	0	0	7	4	0	0	4	16
Total Volume	12	0	3	15	6	0	6	12	23	0	1	24	15	0	4	19	70
% App. Total	80	0	20		50	0	50		95.8	0	4.2		78.9	0	21.1		
PHF	.600	.000	.750	.750	.500	.000	.750	.750	.821	.000	.250	.857	.750	.000	.500	.792	.875

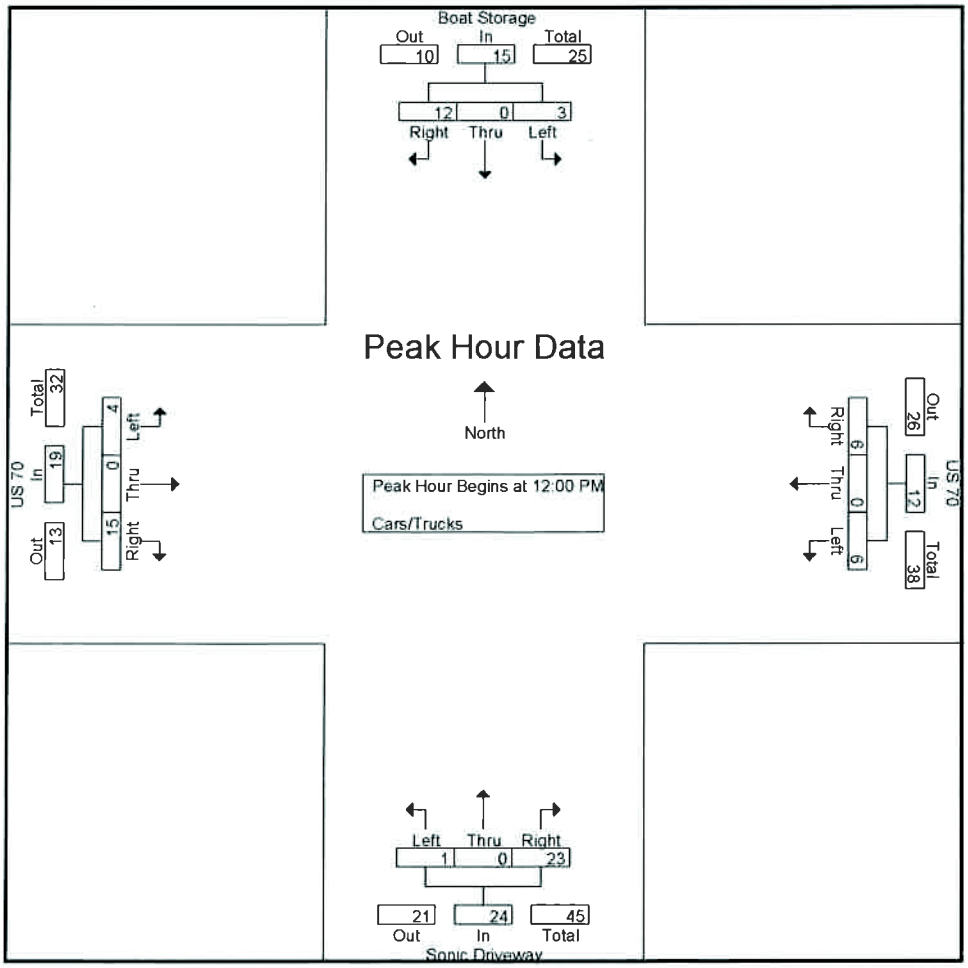

RAMEY KEMP & ASSOCIATES
TRANSPORTATION ENGINEERS

5808 Faringdon Place, Suite 100
Raleigh, NC 27609
PH: 919 872-5115
FX: 919 878-5416

File Name : 15035.07 Sonic Driveway-Boat Storage Driveway and US 70 Sat. Midday
Site Code : 08082015
Start Date : 8/8/2015
Page No : 1

Groups Printed- Turns

	Boat Storage Southbound				US 70 Westbound				Sonic Driveway Northbound				US 70 Eastbound						
Start Time	Right	Thru	Left	Trks	Right	Thru	Left	Trks	Right	Thru	Left	Trks	Right	Thru	Left	Trks	Ext'n Total	Int'n Total	Int Total
*** BREAK ***																			
11:15 AM	0	0	0	0	0	0	0	0	0	0	0	0	0	0	3	0	0	3	3
11:30 AM	0	0	0	0	0	0	1	0	0	0	0	0	0	0	0	0	0	1	1
11:45 AM	0	0	0	0	0	0	0	0	0	0	0	0	0	0	1	0	0	1	1
Total	0	0	0	0	0	0	1	0	0	0	0	0	0	0	4	0	0	5	5
12:00 PM	0	0	0	0	0	0	0	0	0	0	0	0	0	0	1	0	0	1	1
12:15 PM	0	0	0	0	0	0	0	0	0	0	0	0	0	0	2	0	0	2	2
12:30 PM	0	0	0	0	0	0	0	0	0	0	0	0	0	0	3	0	0	3	3
12:45 PM	0	0	0	0	0	0	0	0	0	0	0	0	0	0	2	0	0	2	2
Total	0	0	0	0	0	0	0	0	0	0	0	0	0	0	8	0	0	8	8
*** BREAK ***																			
01:15 PM	0	0	0	0	0	0	1	0	0	0	0	0	0	0	0	0	0	1	1
*** BREAK ***																			
01:45 PM	0	0	0	0	0	0	2	0	0	0	0	0	0	0	1	0	0	3	3
Total	0	0	0	0	0	0	3	0	0	0	0	0	0	0	1	0	0	4	4
Grand Total	0	0	0	0	0	0	4	0	0	0	0	0	0	0	13	0	0	17	17
Apprch %	0	0	0		0	0	100		0	0	0		0	0	100				
Total %	0	0	0		0	0	23.5		0	0	0		0	0	76.5		0	100	

RAMEY KEMP & ASSOCIATES
TRANSPORTATION ENGINEERS

5808 Faringdon Place, Suite 100
Raleigh, NC 27609
PH: 919 872-5115
FX: 919 878-5416
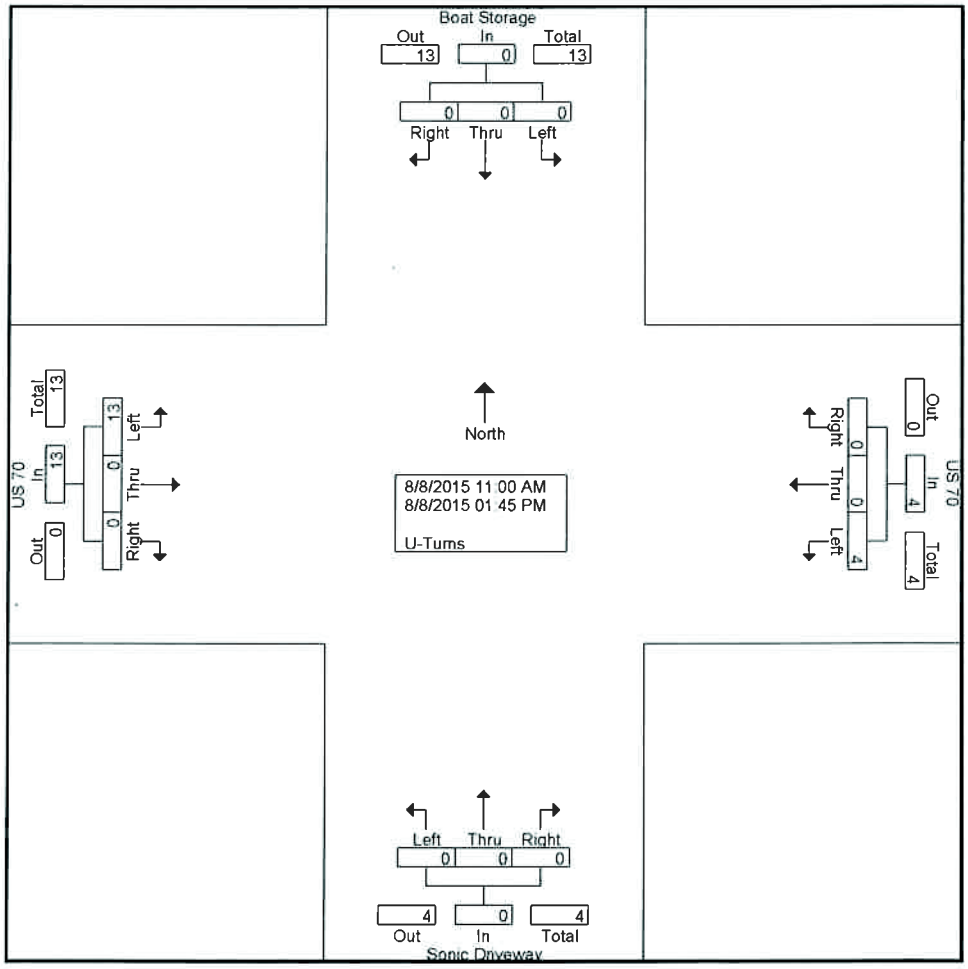
File Name : 15035.07 Sonic Driveway-Boat Storage Driveway and US 70 Sat. Midday
Site Code : 08082015
Start Date : 8/8/2015
Page No : 2