RAMEY KEMP & ASSOCIATES
5808 Faringdon Place, Suite 100
Raleigh, NC 27609
PH: 919 872-5115
FX: 919 878-5416

File Name : Shipyard@Longstreet-Converse
Site Code : 04041101
Start Date : 4/4/2011
Page No : 1

Groups Printed- All Vehicles

	Converse Road Southbound				Shipyard Boulevard Westbound				Longstreet Drive Northbound				Shipyard Boulevard Eastbound						
Start Time	Left	Thru	Right	Trucks	Left	Thru	Right	Trucks	Left	Thru	Right	Trucks	Left	Thru	Right	Trucks	Exclu. Total	Inclu. Total	Int. Total
07:00 AM	2	0	3	0	6	0	1	0	17	3	10	1	3	77	5	2	3	127	130
07:15 AM	0	1	0	0	7	0	4	1	19	5	8	1	4	105	4	7	9	157	166
07:30 AM	1	0	3	0	6	0	10	0	18	7	10	0	13	141	5	12	12	214	226
07:45 AM	0	0	0	0	9	0	12	1	35	15	21	0	26	196	14	5	6	328	334
Total	3	1	6	0	28	0	27	2	89	30	49	2	46	519	28	26	30	826	856
08:00 AM	1	1	3	0	9	0	9	0	36	12	22	1	21	171	7	0	1	292	293
08:15 AM	1	0	2	0	5	0	7	0	29	11	11	0	13	182	9	2	2	270	272
08:30 AM	4	0	4	0	16	0	9	0	24	7	11	0	12	136	8	5	5	231	236
08:45 AM	4	0	1	0	4	0	10	0	21	6	15	0	8	208	7	5	5	284	289
Total	10	1	10	0	34	0	35	0	110	36	59	1	54	697	31	12	13	1077	1090
*** BREAK ***																			
04:00 PM	24	6	37	0	24	0	7	0	26	4	13	0	7	239	16	3	3	403	406
04:15 PM	14	4	9	0	13	0	5	0	28	2	13	0	9	254	32	3	3	383	386
04:30 PM	15	4	11	0	17	0	5	1	17	4	9	1	5	245	16	5	7	348	355
04:45 PM	10	3	3	0	19	0	3	0	27	5	12	1	7	276	25	2	3	390	393
Total	63	17	60	0	73	0	20	1	98	15	47	2	28	1014	89	13	16	1524	1540
05:00 PM	40	12	33	0	24	0	4	0	26	5	13	0	5	344	23	3	3	529	532
05:15 PM	19	13	6	0	23	0	6	0	20	1	19	0	4	372	35	0	0	518	518
05:30 PM	20	8	16	0	27	0	3	1	21	7	13	0	5	313	13	2	3	446	449
05:45 PM	13	5	9	0	19	0	5	0	17	3	8	0	1	231	21	2	2	332	334
Total	92	38	64	0	93	0	18	1	84	16	53	0	15	1260	92	7	8	1825	1833
Grand Total	168	57	140	0	228	0	100	4	381	97	208	5	143	3490	240	58	67	5252	5319
Apprch %	46	15.6	38.4		69.5	0	30.5		55.5	14.1	30.3		3.7	90.1	6.2				
Total %	3.2	1.1	2.7		4.3	0	1.9		7.3	1.8	4		2.7	66.5	4.6		1.3	98.7	

RAMEY KEMP & ASSOCIATES
5808 Faringdon Place, Suite 100
Raleigh, NC 27609
PH: 919 872-5115
FX: 919 878-5416

File Name : Shipyard@Longstreet-Converse
Site Code : 04041101
Start Date : 4/4/2011
Page No : 2

	Converse Road Southbound				Shipyard Boulevard Westbound				Longstreet Drive Northbound				Shipyard Boulevard Eastbound				
Start Time	Left	Thru	Right	App. Total	Left	Thru	Right	App. Total	Left	Thru	Right	App. Total	Left	Thru	Right	App. Total	Int. Total
Peak Hour Analysis From 07:00 AM to 11:45 AM - Peak 1 of 1																	
Peak Hour for Entire Intersection Begins at 07:45 AM																	
07:45 AM	0	0	0	0	9	0	12			15		71	26	196	14	236	328
08:00 AM	1	1	3	5	9	0	9	18	36	12	22	70	21	171	7	199	292
08:15 AM	1	0	2	3	5	0	7	12	29	11	11	51	13	182	9	204	270
08:30 AM	4	0	4	8	16	0	9	25	24	7	11	42	12	136	8	156	231
Total Volume	6	1	9	16	39	0	37	76	124	45	65	234	72	685	38	795	1121
% App. Total	37.5	6.2	56.2		51.3	0	48.7		53	19.2	27.8		9.1	86.2	4.8		
PHF	.375	.250	.563	.500	.609	.000	.771	.760	.861	.750	.739	.824	.692	.874	.679	.842	.854

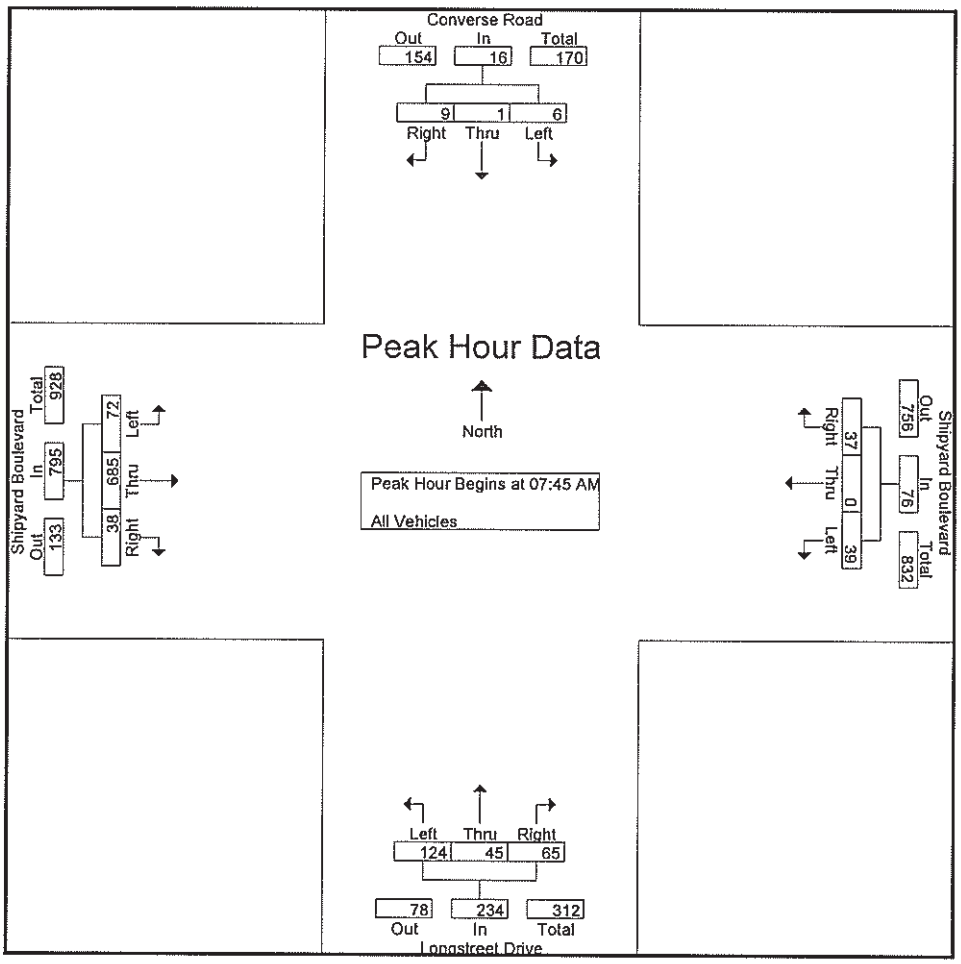

RAMEY KEMP & ASSOCIATES
5808 Faringdon Place, Suite 100
Raleigh, NC 27609
PH: 919 872-5115
FX: 919 878-5416

File Name : Shipyard@Longstreet-Converse
Site Code : 04041101
Start Date : 4/4/2011
Page No : 3

	Converse Road Southbound				Shipyard Boulevard Westbound				Longstreet Drive Northbound				Shipyard Boulevard Eastbound				
Start Time	Left	Thru	Right	App. Total	Left	Thru	Right	App. Total	Left	Thru	Right	App. Total	Left	Thru	Right	App. Total	Int. Total
Peak Hour Analysis From 12:00 PM to 05:45 PM - Peak 1 of 1																	
Peak Hour for Entire Intersection Begins at 04:45 PM																	
04:45 PM	10	3	3	16	19	0	3	22	27			44	7				
05:00 PM	40	12	33	85	24	0	4	28	26	5	13	44	5	344	23	372	529
05:15 PM	19	13	6	38	23	0	6	29	20	1	19	40	4	372	35	411	518
05:30 PM	20	8	16	44	27	0	3	30	21	7	13	41	5	313	13	331	446
Total Volume	89	36	58	183	93	0	16	109	94	18	57	169	21	1305	96	1422	1883
% App. Total	48.6	19.7	31.7		85.3	0	14.7		55.6	10.7	33.7		1.5	91.8	6.8		
PHF	.556	.692	.439	.538	.861	.000	.667	.908	.870	.643	.750	.960	.750	.877	.686	.865	.890

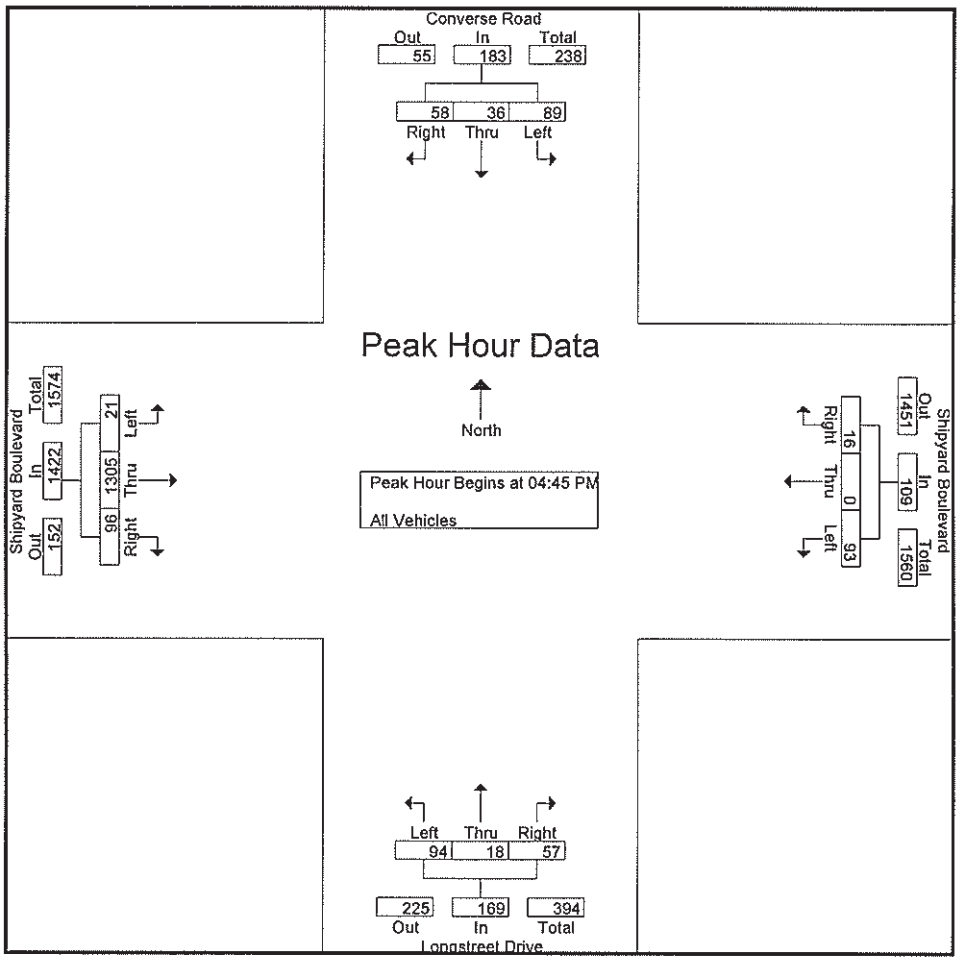

RAMEY KEMP & ASSOCIATES
5808 Faringdon Place, Suite 100
Raleigh, NC 27609
PH: 919 872-5115
FX: 919 878-5416

File Name : Shipyard@Longstreet-Converse
Site Code : 04041101
Start Date : 4/4/2011
Page No : 1

Groups Printed- Turns

	Converse Road Southbound				Shipyard Boulevard Westbound				Longstreet Drive Northbound				Shipyard Boulevard Eastbound						
Start Time	Left	Thru	Right	Trucks	Left	Thru	Right	Trucks	Left	Thru	Right	Trucks	Left	Thru	Right	Trucks	Exclu. Total	Inclu. Total	Int. Total
*** BREAK/NO VOLUME ***																			
07:15 AM	0	0	0	0	1	0	0	0	0	0	0	0	0	0	0	0	0	1	1
07:30 AM	0	0	0	0	2	0	0	0	0	0	0	0	0	0	0	0	0	2	2
07:45 AM	0	0	0	0	1	0	0	0	0	0	0	0	0	0	0	0	0	1	1
Total	0	0	0	0	4	0	0	0	0	0	0	0	0	0	0	0	0	4	4
08:00 AM	0	0	0	0	1	0	0	0	0	0	0	0	0	0	0	0	0	1	1
08:15 AM	0	0	0	0	1	0	0	0	0	0	0	0	0	0	0	0	0	1	1
08:30 AM	0	0	0	0	1	0	0	0	0	0	0	0	0	0	0	0	0	1	1
*** BREAK/NO VOLUME ***																			
Total	0	0	0	0	3	0	0	0	0	0	0	0	0	0	0	0	0	3	3
*** BREAK/NO VOLUME ***																			
04:45 PM	0	0	0	0	0	0	0	0	0	0	0	0	3	0	0	0	0	3	3
Total	0	0	0	0	0	0	0	0	0	0	0	0	3	0	0	0	0	3	3
05:00 PM	0	0	0	0	1	0	0	0	0	0	0	0	0	0	0	0	0	1	1
*** BREAK/NO VOLUME ***																			
05:30 PM	0	0	0	0	1	0	0	0	0	0	0	0	0	0	0	0	0	1	1
05:45 PM	0	0	0	0	1	0	0	0	0	0	0	0	0	0	0	0	0	1	1
Total	0	0	0	0	3	0	0	0	0	0	0	0	0	0	0	0	0	3	3
Grand Total	0	0	0	0	10	0	0	0	0	0	0	0	3	0	0	0	0	13	13
Apprch %	0	0	0		100	0	0		0	0	0		100	0	0				
Total %	0	0	0		76.9	0	0		0	0	0		23.1	0	0		0	100	

RAMEY KEMP & ASSOCIATES
5808 Faringdon Place, Suite 100
Raleigh, NC 27609
PH: 919 872-5115
FX: 919 878-5416
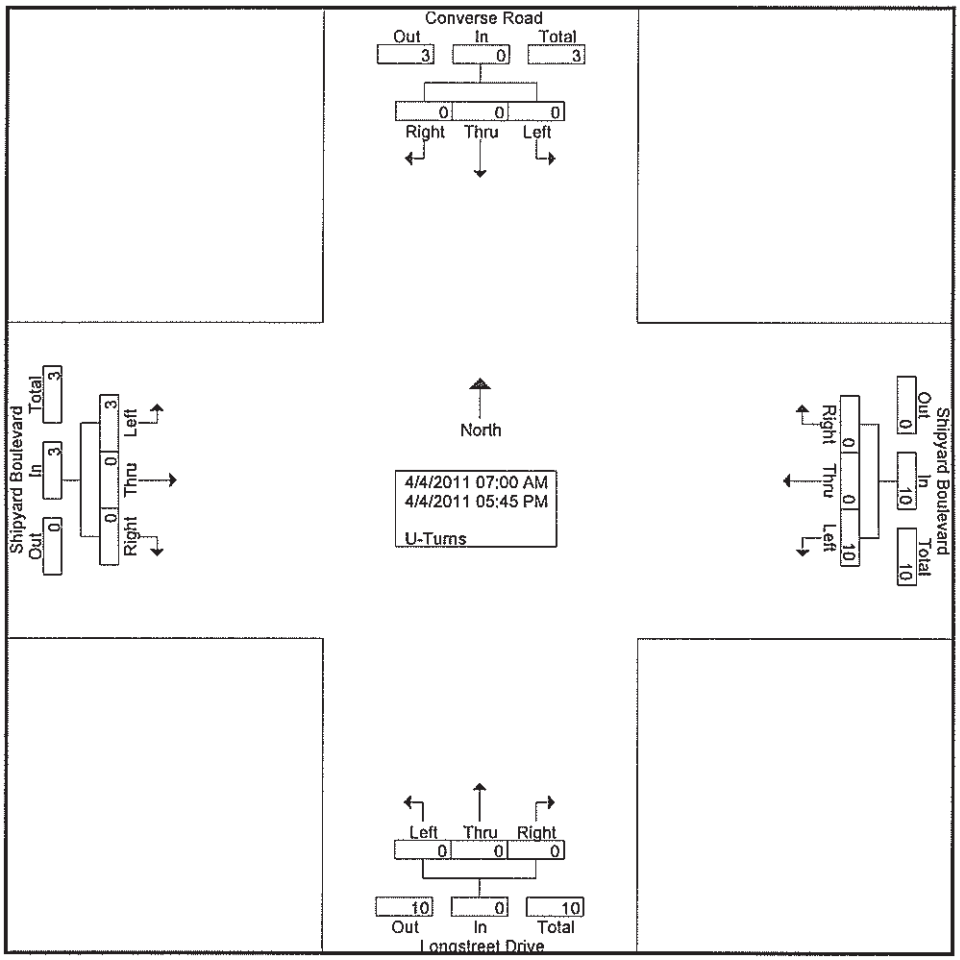
File Name : Shipyard@Longstreet-Converse
Site Code : 04041101
Start Date : 4/4/2011
Page No : 2