RAMEY KEMP & ASSOCIATES
5808 Faringdon Place, Suite 100
Raleigh, NC 27609
PH: 919 872-5115
FX: 919 878-5416

File Name : Shipyard@Pickard
Site Code : 04042011
Start Date : 4/4/2011
Page No : 1

Groups Printed- All Vehicles

	Pickard Road Southbound			Shipyard Boulevard Westbound			Shipyard Boulevard Eastbound					
Start Time	Left	Right	Trucks	Thru	Right	Trucks	Left	Thru	Trucks	Exclu. Total	Inclu. Total	Int. Total
07:00 AM	0	1	0	139	6	3	0	0	0	3	146	149
07:15 AM	0	2	0	237	10	0	0	0	0	0	249	249
07:30 AM	0	0	0	327	19	2	0	0	0	2	346	348
07:45 AM	0	5	0	421	44	2	0	0	0	2	470	472
Total	0	8	0	1124	79	7	0	0	0	7	1211	1218
08:00 AM	0	5	0	271	33	2	0	0	0	2	309	311
08:15 AM	0	5	0	301	19	5	0	0	0	5	325	330
08:30 AM	0	8	0	344	24	1	0	0	0	1	376	377
08:45 AM	0	8	0	247	29	2	0	0	0	2	284	286
Total	0	26	0	1163	105	10	0	0	0	10	1294	1304
*** BREAK ***												
04:00 PM	0	27	0	270	5	7	0	0	0	7	302	309
04:15 PM	0	20	1	236	8	7	0	0	0	8	264	272
04:30 PM	0	19	0	233	5	7	0	0	0	7	257	264
04:45 PM	0	18	0	207	10	2	0	0	0	2	235	237
Total	0	84	1	946	28	23	0	0	0	24	1058	1082
05:00 PM	0	39	1	227	7	5	0	0	0	6	273	279
05:15 PM	0	16	0	236	4	9	0	0	0	9	256	265
05:30 PM	0	11	0	229	3	5	0	0	0	5	243	248
05:45 PM	0	7	0	228	3	1	0	0	0	1	238	239
Total	0	73	1	920	17	20	0	0	0	21	1010	1031
Grand Total	0	191	2	4153	229	60	0	0	0	62	4573	4635
Apprch %	0	100		94.8	5.2		0	0				
Total %	0	4.2		90.8	5		0	0		1.3	98.7	

RAMEY KEMP & ASSOCIATES
5808 Faringdon Place, Suite 100
Raleigh, NC 27609
PH: 919 872-5115
FX: 919 878-5416

File Name : Shipyard@Pickard
Site Code : 04042011
Start Date : 4/4/2011
Page No : 2

	Pickard Road Southbound			Shipyard Boulevard Westbound			Shipyard Boulevard Eastbound			
Start Time	Left	Right	App. Total	Thru	Right	App. Total	Left	Thru	App. Total	Int. Total
Peak Hour Analysis From 07:00 AM to 11:45 AM - Peak 1 of 1										
Peak Hour for Entire Intersection Begins at 07:45 AM										
07:45 AM	0	5	5	421	44	465	0	0	0	470
08:00 AM	0	5	5	271	33	304	0	0	0	309
08:15 AM	0	5	5	301	19	320	0	0	0	325
08:30 AM	0	8	8	344	24	368	0	0	0	376
Total Volume	0	23	23	1337	120	1457	0	0	0	1480
% App. Total	0	100		91.8	8.2		0	0		
PHF	.000	.719	.719	.794	.682	.783	.000	.000	.000	.787

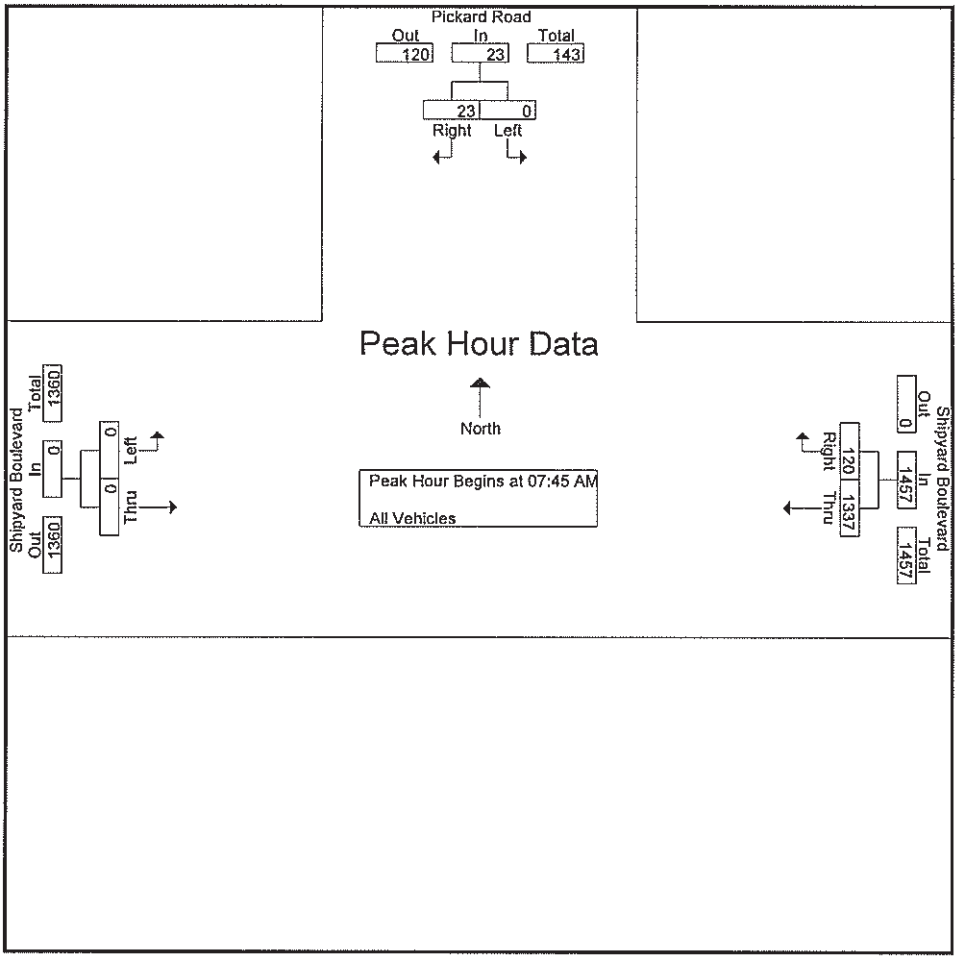

RAMEY KEMP & ASSOCIATES
5808 Faringdon Place, Suite 100
Raleigh, NC 27609
PH: 919 872-5115
FX: 919 878-5416

File Name : Shipyard@Pickard
Site Code : 04042011
Start Date : 4/4/2011
Page No : 3
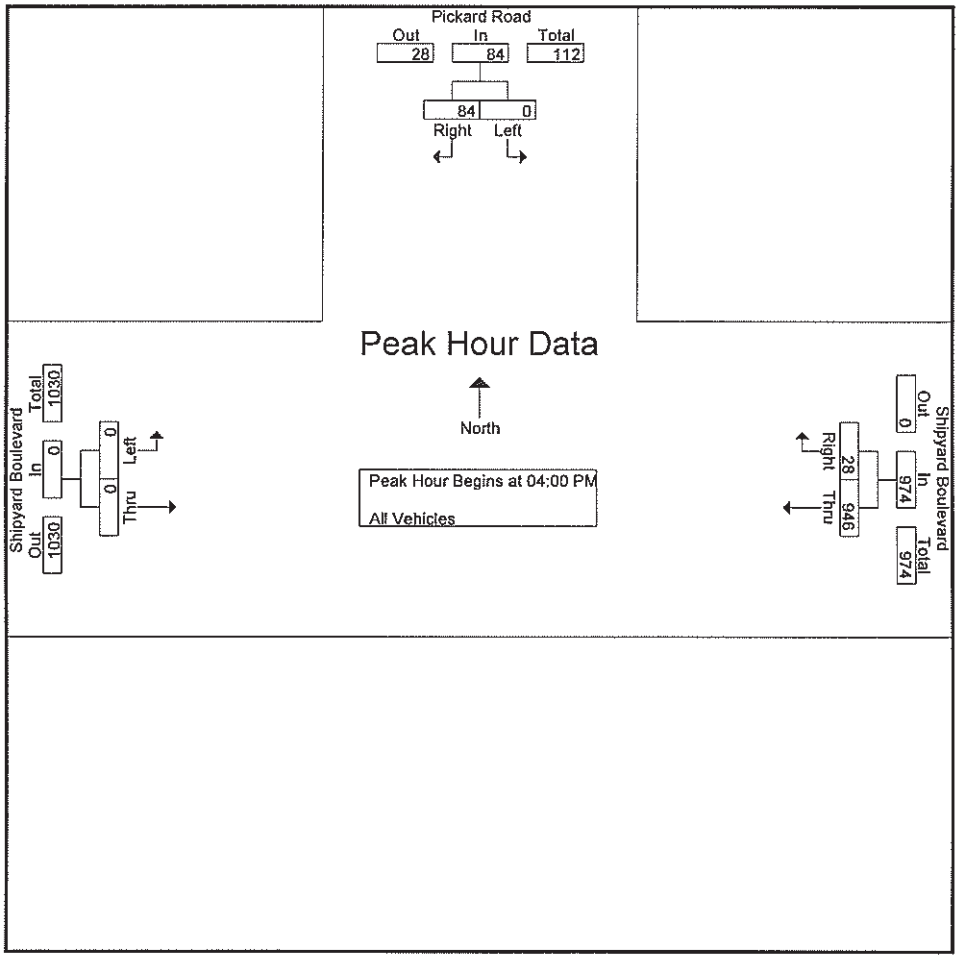
	Pickard Road Southbound			Shipyard Boulevard Westbound			Shipyard Boulevard Eastbound			
Start Time	Left	Right	App. Total	Thru	Right	App. Total	Left	Thru	App. Total	Int. Total
Peak Hour Analysis From 12:00 PM to 05:45 PM - Peak 1 of 1										
Peak Hour for Entire Intersection Begins at 04:00 PM										
04:00 PM	0	27	27	270	5	275	0	0	0	302
04:15 PM	0	20	20	236	8	244	0	0	0	264
04:30 PM	0	19	19	233	5	238	0	0	0	257
04:45 PM	0	18	18	207	10	217	0	0	0	235
Total Volume	0	84	84	946	28	974	0	0	0	1058
% App. Total	0	100		97.1	2.9		0	0		
PHF	.000	.778	.778	.876	.700	.885	.000	.000	.000	.876