RAMEY KEMP & ASSOCIATES
5808 Faringdon Place, Suite 100
Raleigh, NC 27609
PH: 919 872-5115
FX: 919 878-5416

File Name : Shipyard@PineValley
Site Code : 04051102
Start Date : 4/5/2011
Page No : 1

Groups Printed- All Vehicles

	Cardinal Lanes Driveway Southbound				Shipyard Boulevard Westbound				Pine Valley Drive Northbound				Shipyard Boulevard Eastbound						
Start Time	Left	Thru	Right	Trucks	Left	Thru	Right	Trucks	Left	Thru	Right	Trucks	Left	Thru	Right	Trucks	Exclu. Total	Inclu. Total	Int. Total
07:00 AM	0	0	0	0	2	136	0	3	3	0	11	0	0	0	1	0	3	153	156
07:15 AM	0	0	0	0	3	221	0	1	3	0	14	0	0	0	1	0	1	242	243
07:30 AM	0	0	0	0	2	248	0	0	7	0	20	0	0	0	4	0	0	281	281
07:45 AM	0	0	0	0	2	414	0	4	11	0	38	1	0	0	5	0	5	470	475
Total	0	0	0	0	9	1019	0	8	24	0	83	1	0	0	11	0	9	1146	1155
08:00 AM	0	0	0	0	9	315	0	3	7	1	50	0	0	0	1	0	3	383	386
08:15 AM	0	0	0	0	10	309	0	6	5	0	40	0	0	0	2	0	6	366	372
08:30 AM	0	0	0	0	10	342	0	10	5	0	14	1	4	0	1	0	11	376	387
08:45 AM	0	0	1	0	4	257	0	1	4	0	16	0	4	0	2	0	1	288	289
Total	0	0	1	0	33	1223	0	20	21	1	120	1	8	0	6	0	21	1413	1434
*** BREAK/NO VOLUME ***																			
04:00 PM	3	0	3	1	25	242	1	4	4	2	11	0	2	0	9	0	5	302	307
04:15 PM	3	0	1	0	11	210	3	6	6	0	15	1	10	0	10	0	7	269	276
04:30 PM	0	0	2	0	8	209	6	1	2	1	8	0	7	0	5	0	1	248	249
04:45 PM	1	0	4	0	20	227	1	2	5	0	11	0	6	0	4	0	2	279	281
Total	7	0	10	1	64	888	11	13	17	3	45	1	25	0	28	0	15	1098	1113
05:00 PM	0	0	5	0	20	222	2	3	5	1	11	0	5	0	6	0	3	277	280
05:15 PM	3	1	6	0	21	234	1	0	4	0	10	1	7	0	7	0	1	294	295
05:30 PM	7	0	9	0	19	220	1	3	7	1	12	0	11	0	3	0	3	290	293
05:45 PM	4	1	10	0	17	245	0	4	1	3	6	0	17	0	5	0	4	309	313
Total	14	2	30	0	77	921	4	10	17	5	39	1	40	0	21	0	11	1170	1181
Grand Total	21	2	41	1	183	4051	15	51	79	9	287	4	73	0	66	0	56	4827	4883
Apprch %	32.8	3.1	64.1		4.3	95.3	0.4		21.1	2.4	76.5		52.5	0	47.5				
Total %	0.4	0	0.8		3.8	83.9	0.3		1.6	0.2	5.9		1.5	0	1.4		1.1	98.9	

RAMEY KEMP & ASSOCIATES
5808 Faringdon Place, Suite 100
Raleigh, NC 27609
PH: 919 872-5115
FX: 919 878-5416

File Name : Shipyard@PineValley
Site Code : 04051102
Start Date : 4/5/2011
Page No : 2

	Cardinal Lanes Driveway Southbound				Shipyard Boulevard Westbound				Pine Valley Drive Northbound				Shipyard Boulevard Eastbound				
Start Time	Left	Thru	Right	App. Total	Left	Thru	Right	App. Total	Left	Thru	Right	App. Total	Left	Thru	Right	App. Total	Int. Total
Peak Hour Analysis From 07:00 AM to 11:45 AM - Peak 1 of 1																	
Peak Hour for Entire Intersection Begins at 07:45 AM																	
07:45 AM	0	0	0	0	2	414	0	416	11	0	38	49	0	0	5	5	470
08:00 AM	0	0	0	0	9	315	0	324	7	1	50	58	0	0	1	1	383
08:15 AM	0	0	0	0	10	309	0	319	5	0	40	45	0	0	2	2	366
08:30 AM	0	0	0	0	10	342	0	352	5	0	14	19	4	0	1	5	376
Total Volume	0	0	0	0	31	1380	0	1411	28	1	142	171	4	0	9	13	1595
% App. Total	0	0	0		2.2	97.8	0		16.4	0.6	83		30.8	0	69.2		
PHF	.000	.000	.000	.000	.775	.833	.000	.848	.636	.250	.710	.737	.250	.000	.450	.650	.848

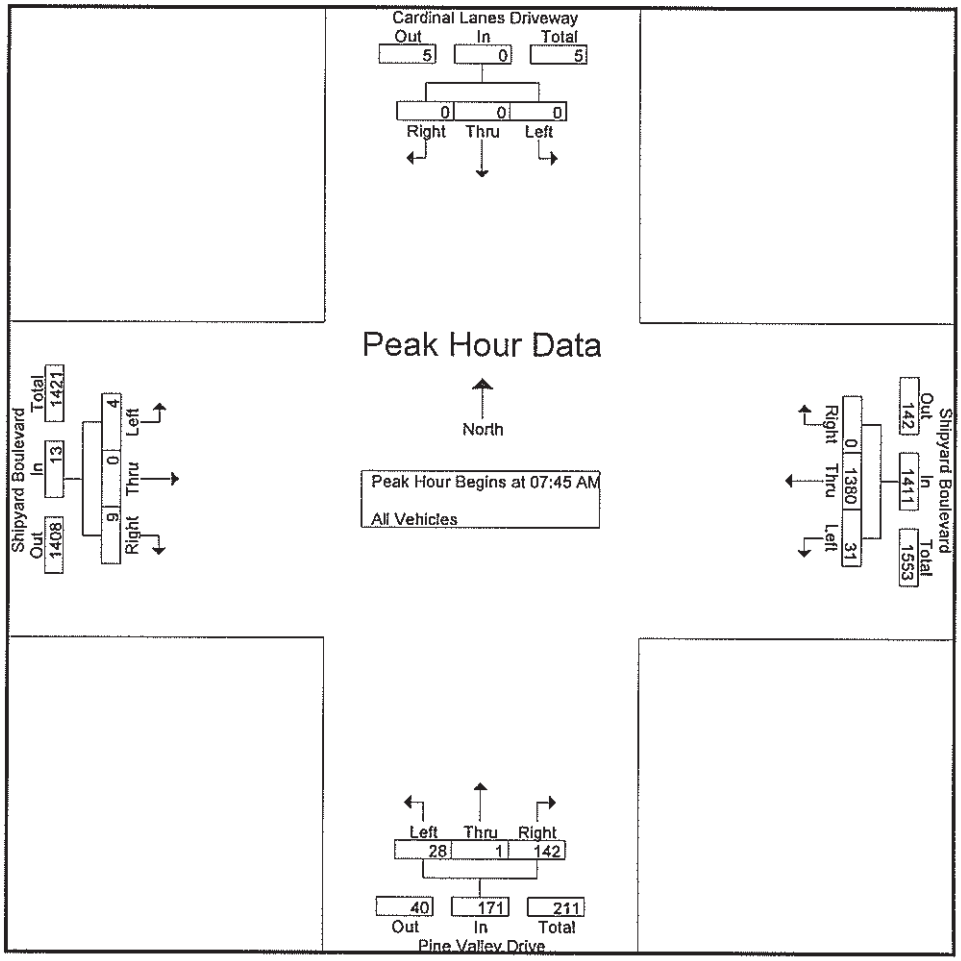

RAMEY KEMP & ASSOCIATES
5808 Faringdon Place, Suite 100
Raleigh, NC 27609
PH: 919 872-5115
FX: 919 878-5416

File Name : Shipyard@PineValley
Site Code : 04051102
Start Date : 4/5/2011
Page No : 3

	Cardinal Lanes Driveway Southbound				Shipyard Boulevard Westbound				Pine Valley Drive Northbound				Shipyard Boulevard Eastbound				
Start Time	Left	Thru	Right	App. Total	Left	Thru	Right	App. Total	Left	Thru	Right	App. Total	Left	Thru	Right	App. Total	Int. Total
Peak Hour Analysis From 12:00 PM to 05:45 PM - Peak 1 of 1																	
Peak Hour for Entire Intersection Begins at 05:00 PM																	
05:00 PM	0	0	5	5	20	222	2	244	5	1	11	17	5	0	6	11	277
05:15 PM	3	1	6	10	21	234	1	256	4	0	10	14	7	0	7	14	294
05:30 PM	7	0	9	16	19	220	1	240	7	1	12	20	11	0	3	14	290
05:45 PM	4	1	10	15	17	245	0	262	1	3	6	10	17	0	5	22	309
Total Volume	14	2	30	46	77	921	4	1002	17	5	39	61	40	0	21	61	1170
% App. Total	30.4	4.3	65.2		7.7	91.9	0.4		27.9	8.2	63.9		65.6	0	34.4		
PHF	.500	.500	.750	.719	.917	.940	.500	.956	.607	.417	.813	.763	.588	.000	.750	.693	.947

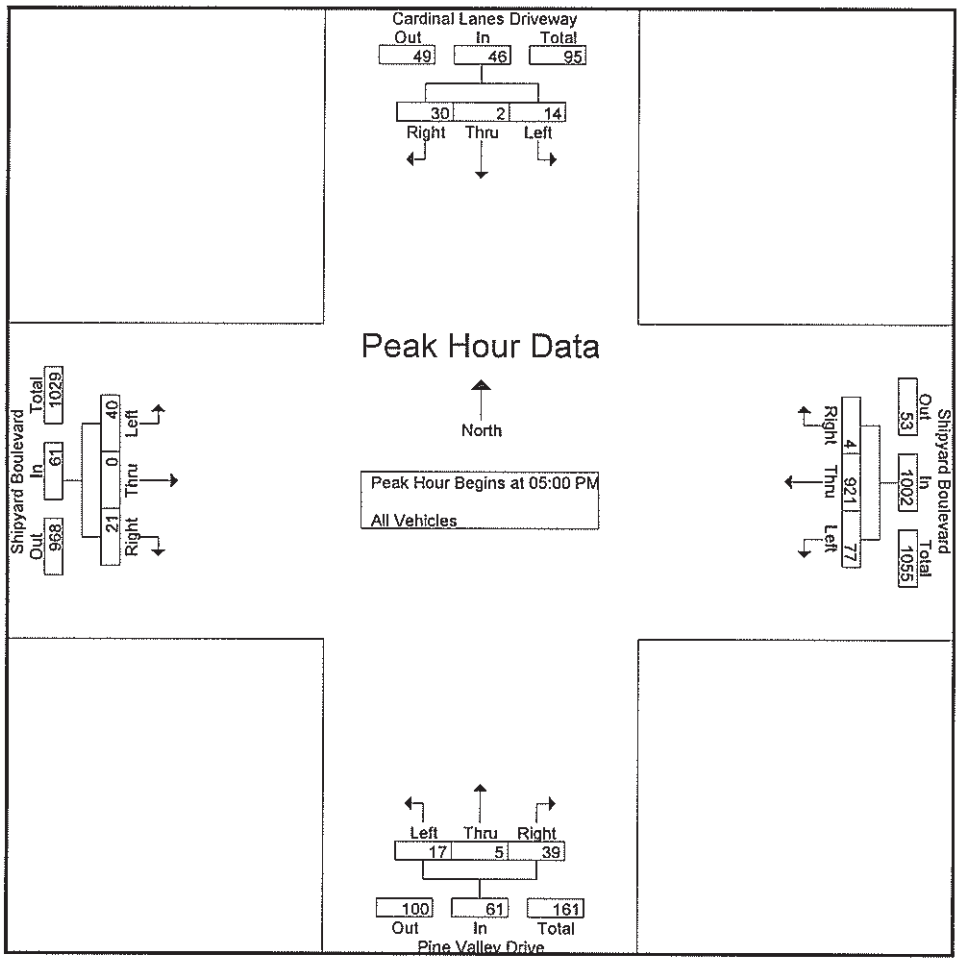

RAMEY KEMP & ASSOCIATES

5808 Faringdon Place, Suite 100
Raleigh, NC 27609
PH: 919 872-5115
FX: 919 878-5416

File Name : Shipyard@PineValley
Site Code : 04051102
Start Date : 4/5/2011
Page No : 1

Groups Printed- Turns/Pedestrians

	Cardinal Lanes Driveway Southbound				Shipyard Boulevard Westbound				Pine Valley Drive Northbound				Shipyard Boulevard Eastbound						
Start Time	Left	Thru	Right	Trucks	Left	Thru	Right	Trucks	Left	Thru	Right	Trucks	Left	Thru	Right	Trucks	Exclu. Total	Inclu. Total	Int. Total
*** BREAK/NO VOLUME ***																			
08:00 AM	0	1	0	0	0	0	0	0	0	0	0	0	0	0	0	0	0	1	1
08:15 AM	0	1	0	0	0	0	0	0	0	0	0	0	0	0	0	0	0	1	1
08:30 AM	0	0	0	0	1	0	0	0	0	1	0	0	1	0	0	0	0	3	3
*** BREAK/NO VOLUME ***																			
Total	0	2	0	0	1	0	0	0	0	1	0	0	1	0	0	0	0	5	5
*** BREAK/NO VOLUME ***																			
04:00 PM	0	0	0	0	3	0	0	0	0	0	0	0	0	0	0	0	0	3	3
04:15 PM	0	2	0	0	2	0	0	0	0	1	0	0	0	0	0	0	0	5	5
04:30 PM	0	1	0	0	0	0	0	0	0	0	0	0	0	0	0	0	0	1	1
04:45 PM	0	0	0	0	1	0	0	0	0	0	0	0	0	0	0	0	0	1	1
Total	0	3	0	0	6	0	0	0	0	1	0	0	0	0	0	0	0	10	10
05:00 PM	0	0	0	0	0	0	0	0	0	1	0	0	0	0	0	0	0	1	1
*** BREAK/NO VOLUME ***																			
05:30 PM	0	0	0	0	0	0	0	0	0	1	0	0	0	0	0	0	0	1	1
05:45 PM	0	0	0	0	1	0	0	0	0	1	0	0	0	0	0	0	0	2	2
Total	0	0	0	0	1	0	0	0	0	3	0	0	0	0	0	0	0	4	4
Grand Total	0	5	0	0	8	0	0	0	0	5	0	0	1	0	0	0	0	19	19
Apprch %	0	100	0		100	0	0		0	100	0		100	0	0				
Total %	0	26.3	0		42.1	0	0		0	26.3	0		5.3	0	0		0	100	

RAMEY KEMP & ASSOCIATES
5808 Faringdon Place, Suite 100
Raleigh, NC 27609
PH: 919 872-5115
FX: 919 878-5416
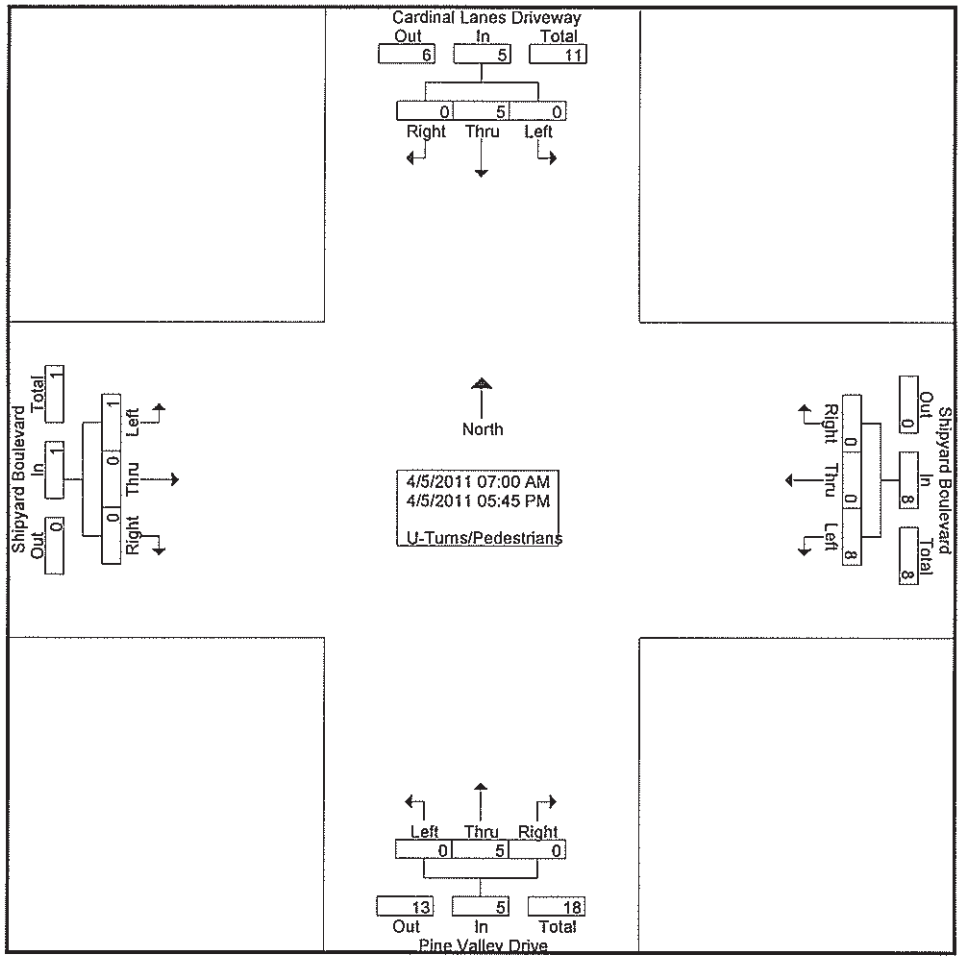
File Name : Shipyard@PineValley
Site Code : 04051102
Start Date : 4/5/2011
Page No : 2