RAMEY KEMP & ASSOCIATES
5808 Faringdon Place, Suite 100
Raleigh, NC 27609
PH: 919 872-5115
FX: 919 878-5416

File Name : Shipyard@Independence
Site Code : 04061101
Start Date : 4/6/2011
Page No : 1

Groups Printed- All Vehicles

	Independence Boulevard Southbound				Shipyard Boulevard Westbound				Independence Boulevard Northbound				Shipyard Boulevard Eastbound						
Start Time	Left	Thru	Right	Trucks	Left	Thru	Right	Trucks	Left	Thru	Right	Trucks	Left	Thru	Right	Trucks	Exclu. Total	Inclu. Total	Int. Total
07:00 AM	12	27	31	1	19	148	15	3	2	59	26	0	26	0	0	1	5	365	370
07:15 AM	12	40	35	2	28	152	30	6	5	110	37	0	22	0	0	1	9	471	480
07:30 AM	9	59	41	1	26	243	34	0	12	123	50	3	33	0	0	0	4	630	634
07:45 AM	18	110	55	1	42	354	38	6	7	191	88	0	50	0	0	0	7	953	960
Total	51	236	162	5	115	897	117	15	26	483	201	3	131	0	0	2	25	2419	2444
08:00 AM	21	73	48	2	30	270	33	2	7	160	63	1	41	0	0	1	6	746	752
08:15 AM	21	67	54	2	50	231	48	2	10	152	96	6	40	0	2	0	10	771	781
08:30 AM	25	42	41	0	43	247	40	4	9	107	51	1	30	0	1	0	5	636	641
08:45 AM	46	58	55	2	23	220	33	3	8	119	63	1	37	6	0	1	7	668	675
Total	113	240	198	6	146	968	154	11	34	538	273	9	148	6	3	2	28	2821	2849
*** BREAK/NO VOLUME ***																			
04:00 PM	29	106	67	2	35	162	33	3	5	92	38	0	74	0	5	0	5	646	651
04:15 PM	37	106	60	0	43	204	34	5	4	68	27	0	68	0	1	0	5	652	657
04:30 PM	32	132	48	4	43	185	42	5	3	84	36	5	98	2	0	1	15	705	720
04:45 PM	41	116	55	0	44	148	23	5	3	105	57	0	85	0	3	1	6	680	686
Total	139	460	230	6	165	699	132	18	15	349	158	5	325	2	9	2	31	2683	2714
05:00 PM	38	153	64	1	69	175	36	2	4	82	48	1	98	0	2	0	4	769	773
05:15 PM	55	177	76	0	55	159	32	1	15	76	48	1	112	0	4	0	2	809	811
05:30 PM	56	150	55	0	56	143	34	2	1	95	30	0	74	0	1	1	3	695	698
05:45 PM	55	171	57	0	33	148	51	4	2	121	61	1	75	0	3	0	5	777	782
Total	204	651	252	1	213	625	153	9	22	374	187	3	359	0	10	1	14	3050	3064
Grand Total	507	1587	842	18	639	3189	556	53	97	1744	819	20	963	8	22	7	98	10973	11071
Apprch %	17.3	54.1	28.7		14.6	72.7	12.7		3.6	65.6	30.8		97	0.8	2.2				
Total %	4.6	14.5	7.7		5.8	29.1	5.1		0.9	15.9	7.5		8.8	0.1	0.2		0.9	99.1	

RAMEY KEMP & ASSOCIATES
5808 Faringdon Place, Suite 100
Raleigh, NC 27609
PH: 919 872-5115
FX: 919 878-5416

File Name : Shipyard@Independence
Site Code : 04061101
Start Date : 4/6/2011
Page No : 2

	Independence Boulevard Southbound				Shipyard Boulevard Westbound				Independence Boulevard Northbound				Shipyard Boulevard Eastbound				
Start Time	Left	Thru	Right	App. Total	Left	Thru	Right	App. Total	Left	Thru	Right	App. Total	Left	Thru	Right	App. Total	Int. Total
Peak Hour Analysis From 07:00 AM to 11:45 AM - Peak 1 of 1																	
Peak Hour for Entire Intersection Begins at 07:45 AM																	
07:45 AM	18	110	55	183	42	354	38	434	7	191	88	286	50	0	0	50	953
08:00 AM	21	73	48	142	30	270	33	333	7	160	63	230	41	0	0	41	746
08:15 AM	21	67	54	142	50	231	48	329	10	152	96	258	40	0	2	42	771
08:30 AM	25	42	41	108	43	247	40	330	9	107	51	167	30	0	1	31	636
Total Volume	85	292	198	575	165	1102	159	1426	33	610	298	941	161	0	3	164	3106
% App. Total	14.8	50.8	34.4		11.6	77.3	11.2		3.5	64.8	31.7		98.2	0	1.8		
PHF	.850	.664	.900	.786	.825	.778	.828	.821	.825	.798	.776	.823	.805	.000	.375	.820	.815

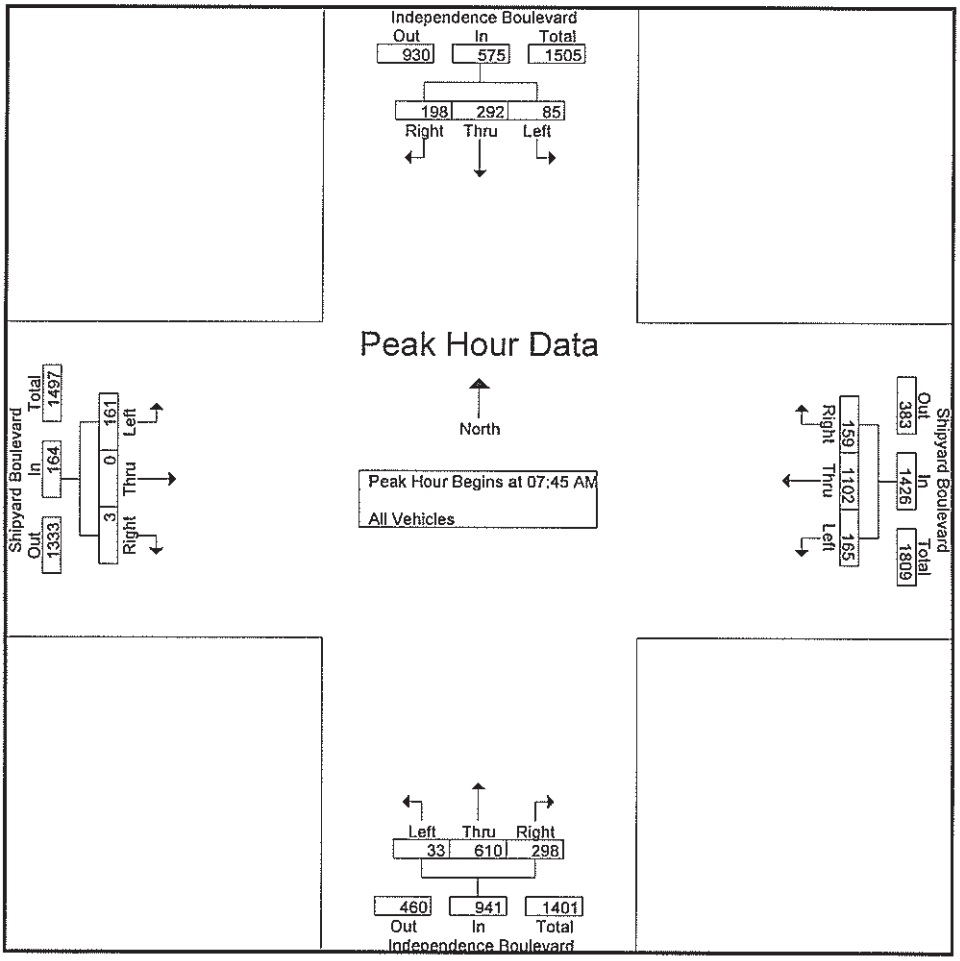

RAMEY KEMP & ASSOCIATES
5808 Faringdon Place, Suite 100
Raleigh, NC 27609
PH: 919 872-5115
FX: 919 878-5416

File Name : Shipyard@Independence
Site Code : 04061101
Start Date : 4/6/2011
Page No : 3

	Independence Boulevard Southbound				Shipyard Boulevard Westbound				Independence Boulevard Northbound				Shipyard Boulevard Eastbound				
Start Time	Left	Thru	Right	App. Total	Left	Thru	Right	App. Total	Left	Thru	Right	App. Total	Left	Thru	Right	App. Total	Int. Total
Peak Hour Analysis From 12:00 PM to 05:45 PM - Peak 1 of 1																	
Peak Hour for Entire Intersection Begins at 05:00 PM																	
05:00 PM	38	153	64	255	69	175	36	280	4	82	48	134	98	0	2	100	769
05:15 PM	55	177	76	308	55	159	32	246	15	76	48	139	112	0	4	116	809
05:30 PM	56	150	55	261	56	143	34	233	1	95	30	126	74	0	1	75	695
05:45 PM	55	171	57	283	33	148	51	232	2	121	61	184	75	0	3	78	777
Total Volume	204	651	252	1107	213	625	153	991	22	374	187	583	359	0	10	369	3050
% App. Total	18.4	58.8	22.8		21.5	63.1	15.4		3.8	64.2	32.1		97.3	0	2.7		
PHF	.911	.919	.829	.899	.772	.893	.750	.885	.367	.773	.766	.792	.801	.000	.625	.795	.943

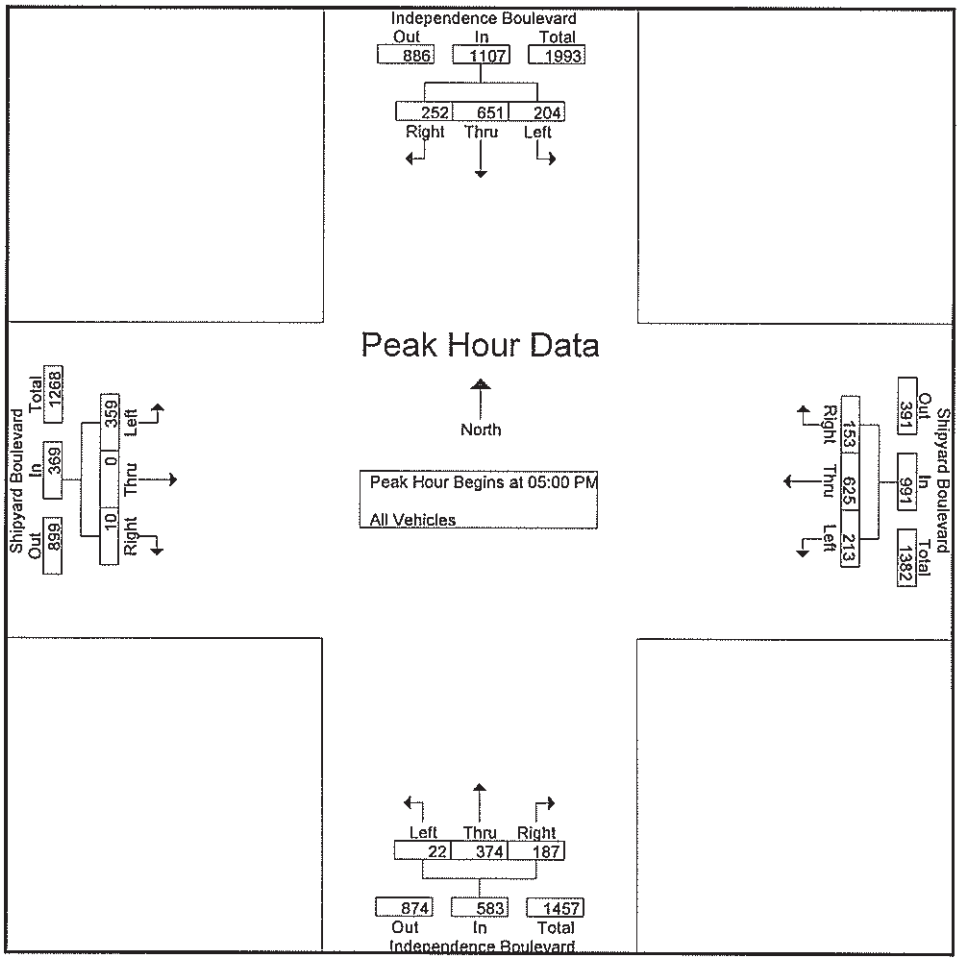

RAMEY KEMP & ASSOCIATES
5808 Faringdon Place, Suite 100
Raleigh, NC 27609
PH: 919 872-5115
FX: 919 878-5416

File Name : Shipyard@Independence
Site Code : 04061101
Start Date : 4/6/2011
Page No : 1

Groups Printed- Turns

	Independence Boulevard Southbound				Shipyard Boulevard Westbound				Independence Boulevard Northbound				Shipyard Boulevard Eastbound						
Start Time	Left	Thru	Right	Trucks	Left	Thru	Right	Trucks	Left	Thru	Right	Trucks	Left	Thru	Right	Trucks	Exclu. Total	Inclu. Total	Int. Total
*** BREAK/NO VOLUME ***																			
07:15 AM	0	0	0	0	0	0	0	0	1	0	0	0	0	0	0	0	0	1	1
07:30 AM	0	0	0	0	1	1	0	0	0	0	0	0	0	0	0	0	0	2	2
07:45 AM	0	0	0	0	0	0	0	0	1	0	0	0	0	0	0	0	0	1	1
Total	0	0	0	0	1	1	0	0	2	0	0	0	0	0	0	0	0	4	4
*** BREAK/NO VOLUME ***																			
08:15 AM	0	0	0	0	0	0	0	0	0	1	0	0	0	0	0	0	0	1	1
08:30 AM	0	0	0	0	1	0	0	0	0	0	0	0	0	0	0	0	0	1	1
08:45 AM	0	1	0	0	0	0	0	0	0	0	0	0	0	0	0	0	0	1	1
Total	0	1	0	0	1	0	0	0	0	1	0	0	0	0	0	0	0	3	3
*** BREAK/NO VOLUME ***																			
04:00 PM	0	0	0	0	1	1	0	0	0	0	0	0	0	0	0	0	0	2	2
*** BREAK/NO VOLUME ***																			
04:45 PM	0	1	0	0	1	2	0	0	0	0	0	0	0	0	0	0	0	4	4
Total	0	1	0	0	2	3	0	0	0	0	0	0	0	0	0	0	0	6	6
*** BREAK/NO VOLUME ***																			
05:15 PM	0	0	0	0	2	0	0	0	0	0	0	0	0	0	0	0	0	2	2
05:30 PM	0	0	0	0	4	0	0	0	0	0	0	0	0	0	0	0	0	4	4
05:45 PM	0	0	0	0	0	1	0	0	0	0	0	0	0	0	0	0	0	1	1
Total	0	0	0	0	6	1	0	0	0	0	0	0	0	0	0	0	0	7	7
Grand Total	0	2	0	0	10	5	0	0	2	1	0	0	0	0	0	0	0	20	20
Apprch %	0	100	0		66.7	33.3	0		66.7	33.3	0		0	0	0				
Total %	0	10	0		50	25	0		10	5	0		0	0	0		0	100	

RAMEY KEMP & ASSOCIATES
5808 Faringdon Place, Suite 100
Raleigh, NC 27609
PH: 919 872-5115
FX: 919 878-5416
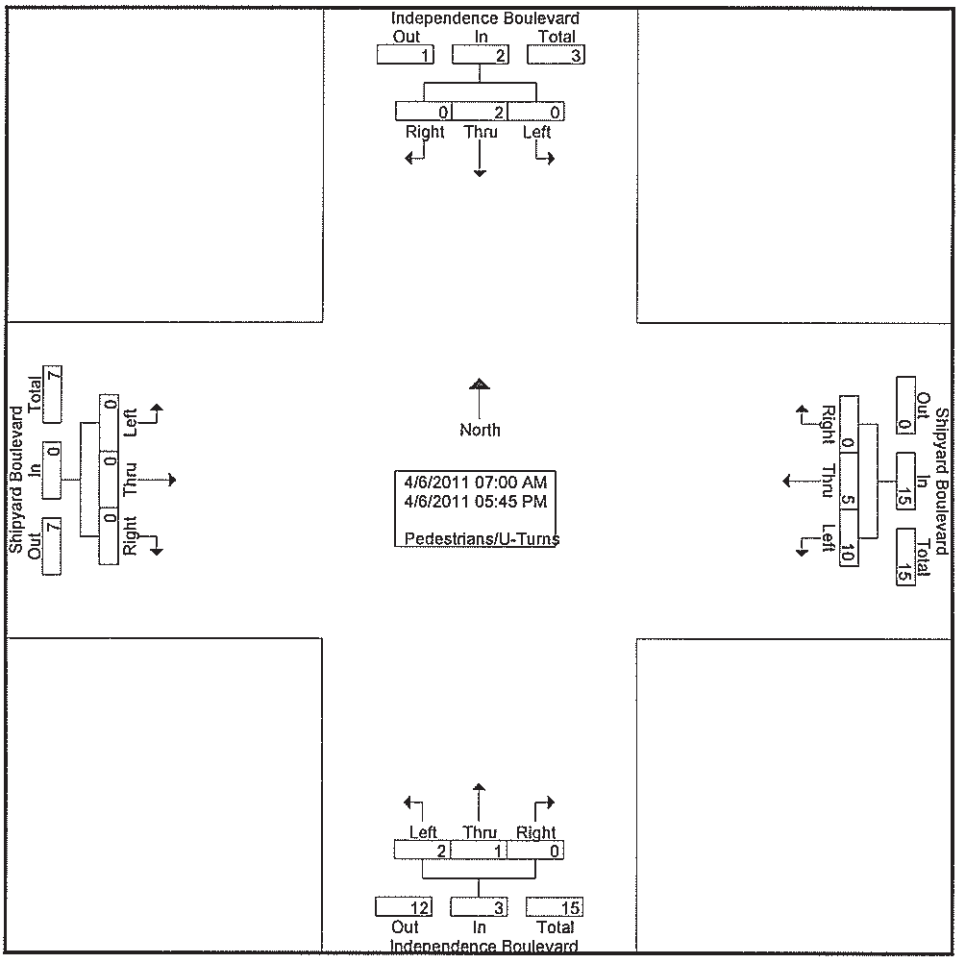
File Name : Shipyard@Independence
Site Code : 04061101
Start Date : 4/6/2011
Page No : 2