RAMEY KEMP & ASSOCIATES
5808 Faringdon Place, Suite 100
Raleigh, NC 27609
PH: 919 872-5115
FX: 919 878-5416

File Name : Shipyard@41st-HollyTree
Site Code : 04072011
Start Date : 4/7/2011
Page No : 1

Groups Printed- All Vehicles

	41st Street Southbound				Shipyard Boulevard Westbound				Holly Tree Road Northbound				Shipyard Boulevard Eastbound						
Start Time	Left	Thru	Right	Trucks	Left	Thru	Right	Trucks	Left	Thru	Right	Trucks	Left	Thru	Right	Trucks	Exclu. Total	Inclu. Total	Int. Total
07:00 AM	7	11	10	0	1	106	9	2	51	51	0	0	7	87	17	2	4	357	361
07:15 AM	5	20	9	0	3	144	5	6	68	44	3	0	16	92	21	4	10	430	440
07:30 AM	4	15	19	0	5	224	13	5	95	58	1	3	25	143	24	5	13	626	639
07:45 AM	5	20	42	0	8	305	22	3	90	110	9	1	54	152	16	2	6	833	839
Total	21	66	80	0	17	779	49	16	304	263	13	4	102	474	78	13	33	2246	2279
08:00 AM	8	27	28	0	7	235	38	1	74	121	5	0	72	156	8	3	4	779	783
08:15 AM	11	31	35	0	27	245	66	1	74	102	13	1	46	176	15	2	4	841	845
08:30 AM	11	13	30	0	14	232	27	2	74	50	3	1	28	139	24	7	10	645	655
08:45 AM	6	15	26	0	8	239	18	5	59	48	2	0	29	162	42	4	9	654	663
Total	36	86	119	0	56	951	149	9	281	321	23	2	175	633	89	16	27	2919	2946
*** BREAK / NO VOLUME ***																			
04:15 PM	28	41	27	0	4	165	18	5	52	41	6	3	27	255	49	2	10	713	723
04:30 PM	23	38	32	0	9	155	21	2	34	36	3	0	41	229	50	3	5	671	676
04:45 PM	17	50	24	2	6	173	19	2	37	27	13	1	23	239	49	5	10	677	687
Total	68	129	83	2	19	493	58	9	123	104	22	4	91	723	148	10	25	2061	2086
05:00 PM	25	62	30	2	5	161	16	3	44	38	7	0	33	261	83	4	9	765	774
05:15 PM	17	67	37	0	4	167	23	5	42	40	8	0	45	331	104	3	8	885	893
05:30 PM	20	49	29	0	5	196	23	3	26	30	7	1	27	267	69	2	6	748	754
05:45 PM	24	47	29	0	1	186	25	4	27	35	4	0	31	245	78	3	7	732	739
Total	86	225	125	2	15	710	87	15	139	143	26	1	136	1104	334	12	30	3130	3160
06:00 PM	12	41	20	0	1	214	24	6	39	32	6	0	20	190	47	1	7	646	653
Grand Total	223	547	427	4	108	3147	367	55	886	863	90	11	524	3124	696	52	122	11002	11124
Apprch %	18.6	45.7	35.7		3	86.9	10.1		48.2	46.9	4.9		12.1	71.9	16				
Total %	2	5	3.9		1	28.6	3.3		8.1	7.8	0.8		4.8	28.4	6.3		1.1	98.9	

RAMEY KEMP & ASSOCIATES
5808 Faringdon Place, Suite 100
Raleigh, NC 27609
PH: 919 872-5115
FX: 919 878-5416

File Name : Shipyard@41st-HollyTree
Site Code : 04072011
Start Date : 4/7/2011
Page No : 2

	41st Street Southbound				Shipyard Boulevard Westbound				Holly Tree Road Northbound				Shipyard Boulevard Eastbound				
Start Time	Left	Thru	Right	App. Total	Left	Thru	Right	App. Total	Left	Thru	Right	App. Total	Left	Thru	Right	App. Total	Int. Total
Peak Hour Analysis From 07:00 AM to 11:45 AM - Peak 1 of 1																	
Peak Hour for Entire Intersection Begins at 07:45 AM																	
07:45 AM	5	20	42	67	8	305	22	335	90	110	9	209	54	152	16	222	833
08:00 AM	8	27	28	63	7	235	38	280	74	121	5	200	72	156	8	236	779
08:15 AM	11	31	35	77	27	245	66	338	74	102	13	189	46	176	15	237	841
08:30 AM	11	13	30	54	14	232	27	273	74	50	3	127	28	139	24	191	645
Total Volume	35	91	135	261	56	1017	153	1226	312	383	30	725	200	623	63	886	3098
% App. Total	13.4	34.9	51.7		4.6	83	12.5		43	52.8	4.1		22.6	70.3	7.1		
PHF	.795	.734	.804	.847	.519	.834	.580	.907	.867	.791	.577	.867	.694	.885	.656	.935	.921

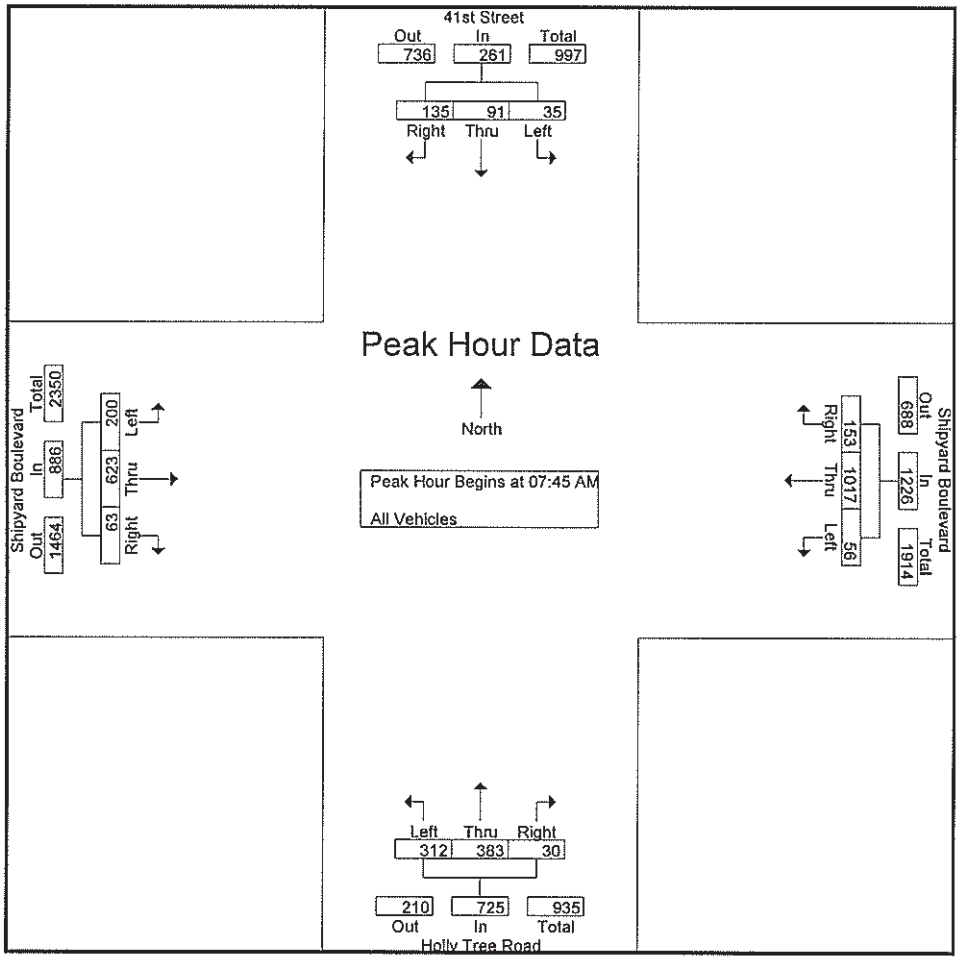

RAMEY KEMP & ASSOCIATES
5808 Faringdon Place, Suite 100
Raleigh, NC 27609
PH: 919 872-5115
FX: 919 878-5416

File Name : Shipyard@41st-HollyTree
Site Code : 04072011
Start Date : 4/7/2011
Page No : 3

	41st Street Southbound				Shipyard Boulevard Westbound				Holly Tree Road Northbound				Shipyard Boulevard Eastbound				
Start Time	Left	Thru	Right	App. Total	Left	Thru	Right	App. Total	Left	Thru	Right	App. Total	Left	Thru	Right	App. Total	Int. Total
Peak Hour Analysis From 12:00 PM to 06:00 PM - Peak 1 of 1																	
Peak Hour for Entire Intersection Begins at 05:00 PM																	
05:00 PM	25	62	30	117	5	161	16	182	44	38	7	89	33	261	83	377	765
05:15 PM	17	67	37	121	4	167	23	194	42	40	8	90	45	331	104	480	885
05:30 PM	20	49	29	98	5	196	23	224	26	30	7	63	27	267	69	363	748
05:45 PM	24	47	29	100	1	186	25	212	27	35	4	66	31	245	78	354	732
Total Volume	86	225	125	436	15	710	87	812	139	143	26	308	136	1104	334	1574	3130
% App. Total	19.7	51.6	28.7		1.8	87.4	10.7		45.1	46.4	8.4		8.6	70.1	21.2		
PHF	.860	.840	.845	.901	.750	.906	.870	.906	.790	.894	.813	.856	.756	.834	.803	.820	.884

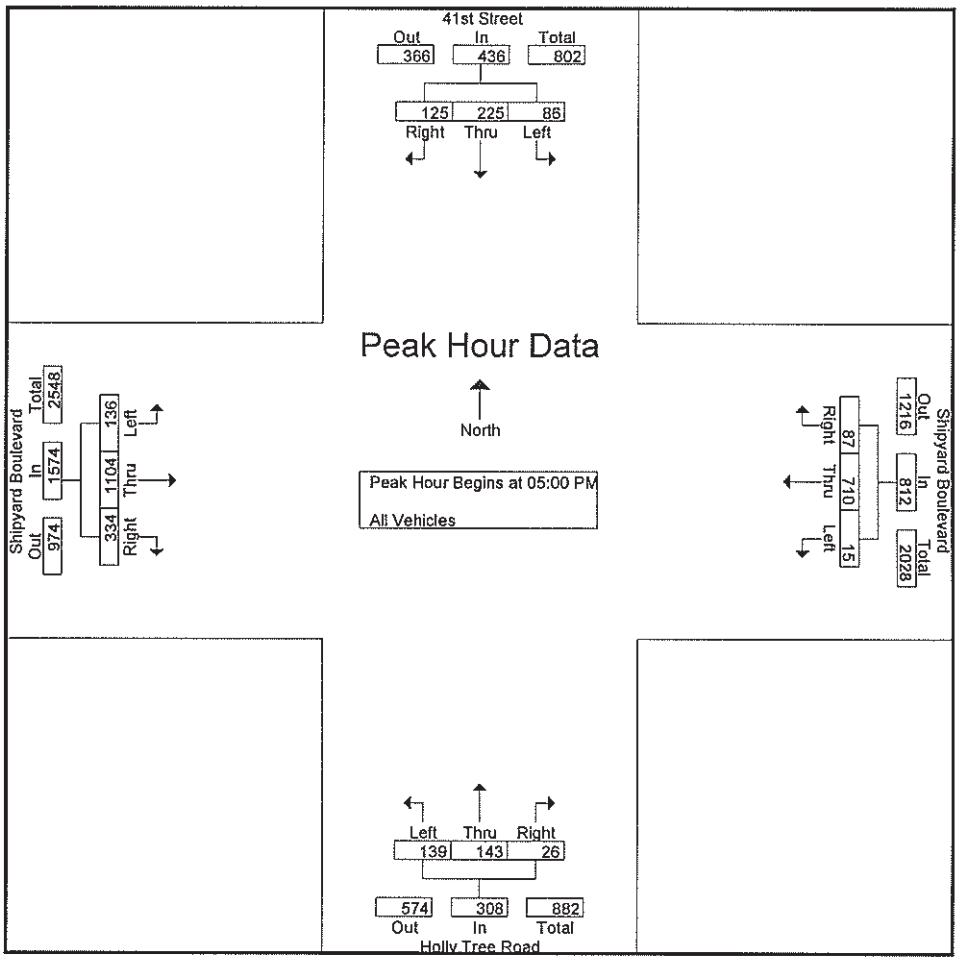

RAMEY KEMP & ASSOCIATES
5808 Faringdon Place, Suite 100
Raleigh, NC 27609
PH: 919 872-5115
FX: 919 878-5416

File Name : Shipyard@41st-HollyTree
Site Code : 04072011
Start Date : 4/7/2011
Page No : 1

Groups Printed- Turns

	41st Street Southbound				Shipyard Boulevard Westbound				Holly Tree Road Northbound				Shipyard Boulevard Eastbound						
Start Time	Left	Thru	Right	Trucks	Left	Thru	Right	Trucks	Left	Thru	Right	Trucks	Left	Thru	Right	Trucks	Exclu. Total	Inclu. Total	Int. Total
*** BREAK / NO VOLUME ***																			
07:15 AM	0	0	0	0	1	0	0	0	0	0	0	0	0	0	0	0	0	1	1
07:30 AM	0	0	0	0	1	1	0	0	0	0	0	0	1	0	0	0	0	3	3
07:45 AM	0	0	0	0	0	2	0	0	0	0	0	0	2	0	0	1	1	4	5
Total	0	0	0	0	2	3	0	0	0	0	0	0	3	0	0	1	1	8	9
08:00 AM	0	0	0	0	12	7	0	0	0	0	0	0	1	0	0	0	0	20	20
08:15 AM	2	0	0	0	20	5	0	0	0	0	0	0	3	0	0	0	0	30	30
08:30 AM	1	0	0	0	11	4	0	0	0	0	0	0	1	0	0	0	0	17	17
08:45 AM	0	0	0	0	1	0	0	0	0	0	0	0	2	0	0	0	0	3	3
Total	3	0	0	0	44	16	0	0	0	0	0	0	7	0	0	0	0	70	70
*** BREAK / NO VOLUME ***																			
04:15 PM	0	0	0	0	1	4	0	0	0	0	0	0	5	0	0	0	0	10	10
04:30 PM	0	0	0	0	0	3	0	0	0	0	0	0	0	0	0	0	0	3	3
04:45 PM	0	0	0	0	4	4	0	0	0	0	0	0	1	0	0	0	0	9	9
Total	0	0	0	0	5	11	0	0	0	0	0	0	6	0	0	0	0	22	22
05:00 PM	0	0	0	0	4	2	0	0	0	0	0	0	3	0	0	0	0	9	9
05:15 PM	0	0	0	0	3	0	0	0	0	0	0	0	1	0	0	0	0	4	4
05:30 PM	0	0	0	0	2	0	0	0	0	0	0	0	0	0	0	0	0	2	2
05:45 PM	0	0	0	0	1	1	0	0	0	0	0	0	0	0	0	0	0	2	2
Total	0	0	0	0	10	3	0	0	0	0	0	0	4	0	0	0	0	17	17
*** BREAK / NO VOLUME ***																			
Grand Total	3	0	0	0	61	33	0	0	0	0	0	0	20	0	0	1	1	117	118
Apprch %	100	0	0		64.9	35.1	0		0	0	0		100	0	0				
Total %	2.6	0	0		52.1	28.2	0		0	0	0		17.1	0	0		0.8	99.2	

RAMEY KEMP & ASSOCIATES
5808 Faringdon Place, Suite 100
Raleigh, NC 27609
PH: 919 872-5115
FX: 919 878-5416
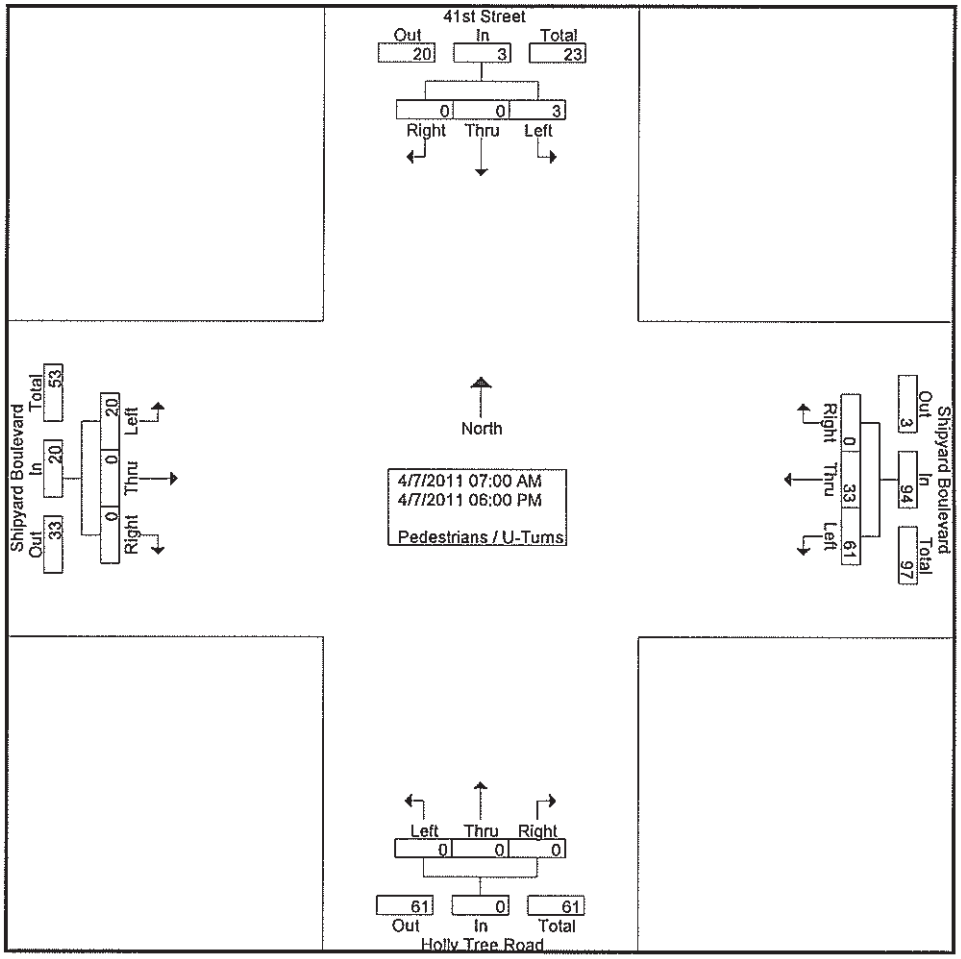
File Name : Shipyard@41st-HollyTree
Site Code : 04072011
Start Date : 4/7/2011
Page No : 2