RAMEY KEMP & ASSOCIATES
5808 Faringdon Place, Suite 100
Raleigh, NC 27609
PH: 919 872-5115
FX: 919 878-5416

File Name : Independence@Reston
Site Code : 04111101
Start Date : 4/11/2011
Page No : 1

Groups Printed- All Vehicles

	Independence Boulevard Southbound				Reston Court Westbound				Independence Boulevard Northbound				Eastbound						
Start Time	Left	Thru	Right	Trucks	Left	Thru	Right	Trucks	Left	Thru	Right	Trucks	Left	Thru	Right	Trucks	Exclu. Total	Inclu. Total	Int. Total
07:00 AM	0	78	0	0	0	0	0	0	0	105	0	1	0	0	0	0	1	183	184
07:15 AM	2	95	0	0	0	0	1	0	1	119	0	0	0	0	0	0	0	218	218
07:30 AM	1	132	0	0	1	0	3	0	0	168	0	1	0	0	0	0	1	305	306
07:45 AM	0	247	0	0	1	0	1	0	0	245	0	3	0	0	0	0	3	494	497
Total	3	552	0	0	2	0	5	0	1	637	0	5	0	0	0	0	5	1200	1205
08:00 AM	2	150	0	1	0	0	0	0	0	226	0	2	0	0	0	0	3	378	381
08:15 AM	1	129	0	3	0	0	2	0	0	206	2	1	0	0	0	0	4	340	344
08:30 AM	1	155	0	2	3	0	3	0	1	195	0	1	0	0	0	0	3	358	361
08:45 AM	0	132	0	0	0	0	3	0	0	213	1	0	0	0	0	0	0	349	349
Total	4	566	0	6	3	0	8	0	1	840	3	4	0	0	0	0	10	1425	1435
*** Break / No Volume ***																			
04:00 PM	2	234	0	2	0	0	3	0	2	242	2	0	0	0	0	0	2	485	487
04:15 PM	4	225	0	2	1	0	2	0	0	247	0	1	0	0	0	0	3	479	482
04:30 PM	2	191	0	0	3	0	0	0	0	197	2	2	0	0	0	0	2	395	397
04:45 PM	4	246	0	1	2	0	0	0	1	213	4	2	0	0	0	0	3	470	473
Total	12	896	0	5	6	0	5	0	3	899	8	5	0	0	0	0	10	1829	1839
05:00 PM	3	284	0	0	1	0	7	0	0	303	0	3	0	0	0	0	3	598	601
05:15 PM	1	230	0	0	0	0	1	0	0	257	1	0	0	0	0	0	0	490	490
05:30 PM	2	269	0	1	0	0	3	0	1	213	1	1	0	0	0	0	2	489	491
05:45 PM	2	231	0	0	0	0	3	0	0	195	0	0	0	0	0	0	0	431	431
Total	8	1014	0	1	1	0	14	0	1	968	2	4	0	0	0	0	5	2008	2013
Grand Total	27	3028	0	12	12	0	32	0	6	3344	13	18	0	0	0	0	30	6462	6492
Apprch %	0.9	99.1	0		27.3	0	72.7		0.2	99.4	0.4		0	0	0				
Total %	0.4	46.9	0		0.2	0	0.5		0.1	51.7	0.2		0	0	0		0.5	99.5	

RAMEY KEMP & ASSOCIATES
5808 Faringdon Place, Suite 100
Raleigh, NC 27609
PH: 919 872-5115
FX: 919 878-5416

File Name : Independence@Reston
Site Code : 04111101
Start Date : 4/11/2011
Page No : 2

	Independence Boulevard Southbound				Reston Court Westbound				Independence Boulevard Northbound				Eastbound				
Start Time	Left	Thru	Right	App. Total	Left	Thru	Right	App. Total	Left	Thru	Right	App. Total	Left	Thru	Right	App. Total	Int. Total
Peak Hour Analysis From 07:00 AM to 11:45 AM - Peak 1 of 1																	
Peak Hour for Entire Intersection Begins at 07:45 AM																	
07:45 AM	0	**247**	0	**247**	1	0	1	2	0	**245**	0	**245**	0	0	0	0	**494**
08:00 AM	2	150	0	152	0	0	0	0	0	226	0	226	0	0	0	0	378
08:15 AM	1	129	0	130	0	0	2	2	0	206	2	208	0	0	0	0	340
08:30 AM	1	155	0	156	3	0	3	6	1	195	0	196	0	0	0	0	358
Total Volume	4	681	0	685	4	0	6	10	1	872	2	875	0	0	0	0	1570
% App. Total	0.6	99.4	0		40	0	60		0.1	99.7	0.2		0	0	0		
PHF	.500	.689	.000	.693	.333	.000	.500	.417	.250	.890	.250	.893	.000	.000	.000	.000	.795

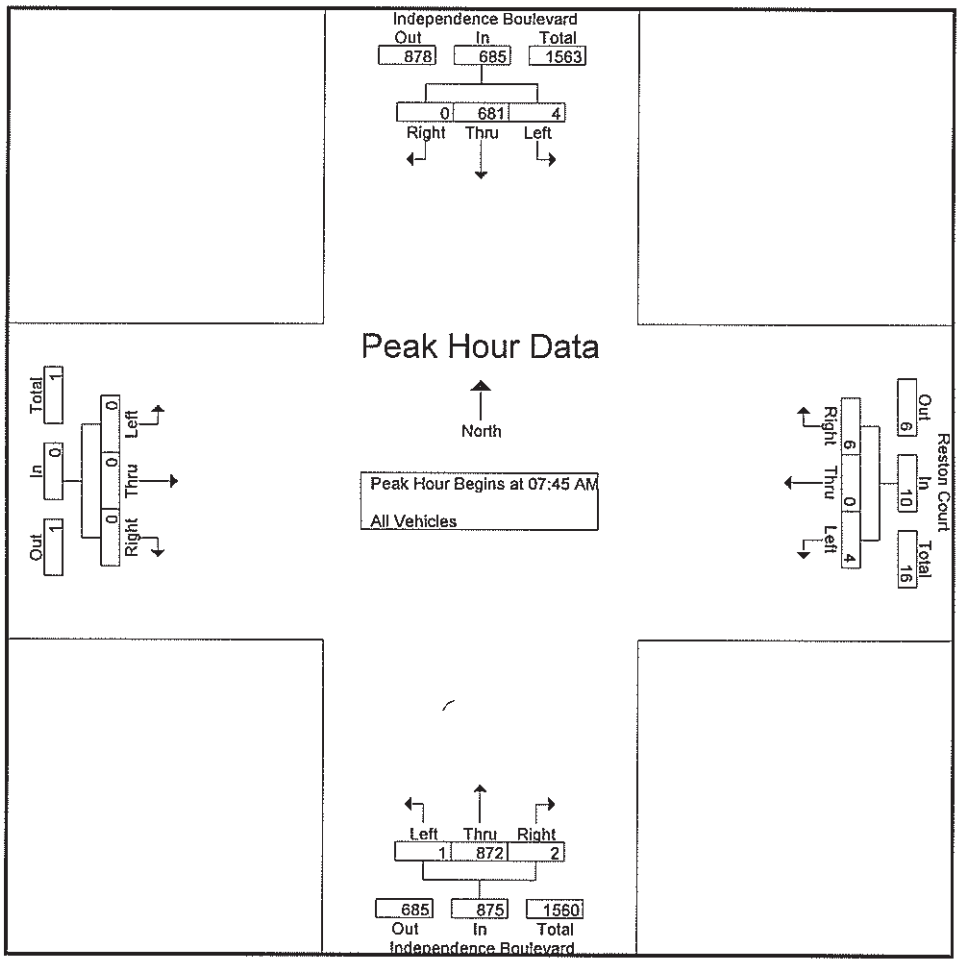

RAMEY KEMP & ASSOCIATES
5808 Faringdon Place, Suite 100
Raleigh, NC 27609
PH: 919 872-5115
FX: 919 878-5416

File Name : Independence@Reston
Site Code : 04111101
Start Date : 4/11/2011
Page No : 3

	Independence Boulevard Southbound				Reston Court Westbound				Independence Boulevard Northbound				Eastbound				
Start Time	Left	Thru	Right	App. Total	Left	Thru	Right	App. Total	Left	Thru	Right	App. Total	Left	Thru	Right	App. Total	Int. Total
Peak Hour Analysis From 12:00 PM to 05:45 PM - Peak 1 of 1																	
Peak Hour for Entire Intersection Begins at 04:45 PM																	
04:45 PM	4	246	0	250	2	0	0	2	1	213	4	218	0	0	0	0	470
05:00 PM	3	284	0	287	1	0	7	8	0	303	0	303	0	0	0	0	598
05:15 PM	1	230	0	231	0	0	1	1	0	257	1	258	0	0	0	0	490
05:30 PM	2	269	0	271	0	0	3	3	1	213	1	215	0	0	0	0	489
Total Volume	10	1029	0	1039	3	0	11	14	2	986	6	994	0	0	0	0	2047
% App. Total	1	99	0		21.4	0	78.6		0.2	99.2	0.6		0	0	0		
PHF	.625	.906	.000	.905	.375	.000	.393	.438	.500	.814	.375	.820	.000	.000	.000	.000	.856

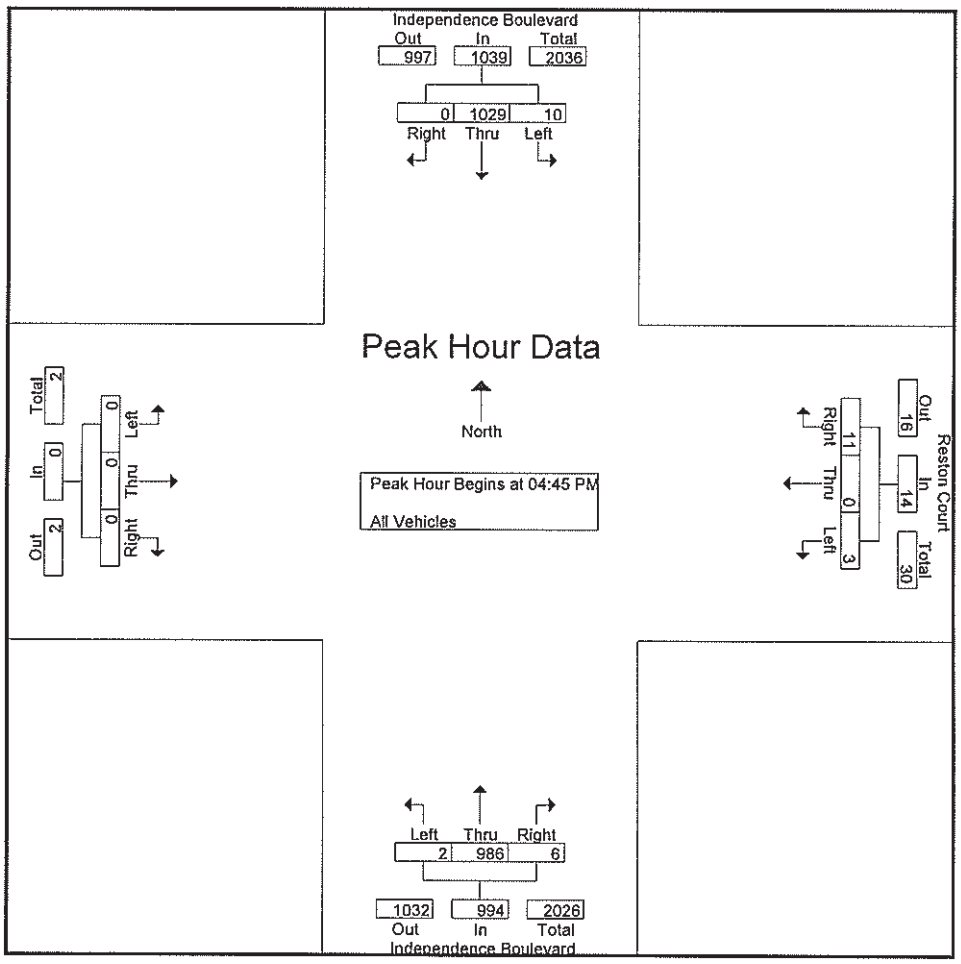

RAMEY KEMP & ASSOCIATES
5808 Faringdon Place, Suite 100
Raleigh, NC 27609
PH: 919 872-5115
FX: 919 878-5416

File Name : Independence@Reston
Site Code : 04111101
Start Date : 4/11/2011
Page No : 1

Groups Printed- Pedestrians

	Independence Boulevard Southbound				Reston Court Westbound				Independence Boulevard Northbound				Eastbound						
Start Time	Left	Thru	Right	Trucks	Left	Thru	Right	Trucks	Left	Thru	Right	Trucks	Left	Thru	Right	Trucks	Exclu. Total	Inclu. Total	Int. Total
*** Break / No Volume ***																			
07:15 AM	0	0	0	0	0	1	0	0	0	0	0	0	0	0	0	0	0	1	1
07:30 AM	0	0	0	0	0	3	0	0	0	0	0	0	0	0	0	0	0	3	3
07:45 AM	0	0	0	0	0	1	0	0	0	0	0	0	0	0	0	0	0	1	1
Total	0	0	0	0	0	5	0	0	0	0	0	0	0	0	0	0	0	5	5
*** Break / No Volume ***																			
08:15 AM	0	0	0	0	0	1	0	0	0	0	0	0	0	0	0	0	0	1	1
08:30 AM	0	0	0	0	0	2	0	0	0	0	0	0	0	0	0	0	0	2	2
08:45 AM	0	0	0	0	0	2	0	0	0	0	0	0	0	0	0	0	0	2	2
Total	0	0	0	0	0	5	0	0	0	0	0	0	0	0	0	0	0	5	5
*** Break / No Volume ***																			
04:15 PM	0	0	0	0	0	2	0	0	0	0	0	0	0	0	0	0	0	2	2
04:30 PM	0	0	0	0	0	3	0	0	0	0	0	0	0	0	0	0	0	3	3
04:45 PM	0	0	0	0	0	2	0	0	0	0	0	0	0	0	0	0	0	2	2
Total	0	0	0	0	0	7	0	0	0	0	0	0	0	0	0	0	0	7	7
05:00 PM	0	0	0	0	0	2	0	0	0	0	0	0	0	0	0	0	0	2	2
*** Break / No Volume ***																			
05:45 PM	0	0	0	0	0	1	0	0	0	0	0	0	0	0	0	0	0	1	1
Total	0	0	0	0	0	3	0	0	0	0	0	0	0	0	0	0	0	3	3
Grand Total	0	0	0	0	0	20	0	0	0	0	0	0	0	0	0	0	0	20	20
Apprch %	0	0	0		0	100	0		0	0	0		0	0	0				
Total %	0	0	0		0	100	0		0	0	0		0	0	0		0	100	

RAMEY KEMP & ASSOCIATES
5808 Faringdon Place, Suite 100
Raleigh, NC 27609
PH: 919 872-5115
FX: 919 878-5416
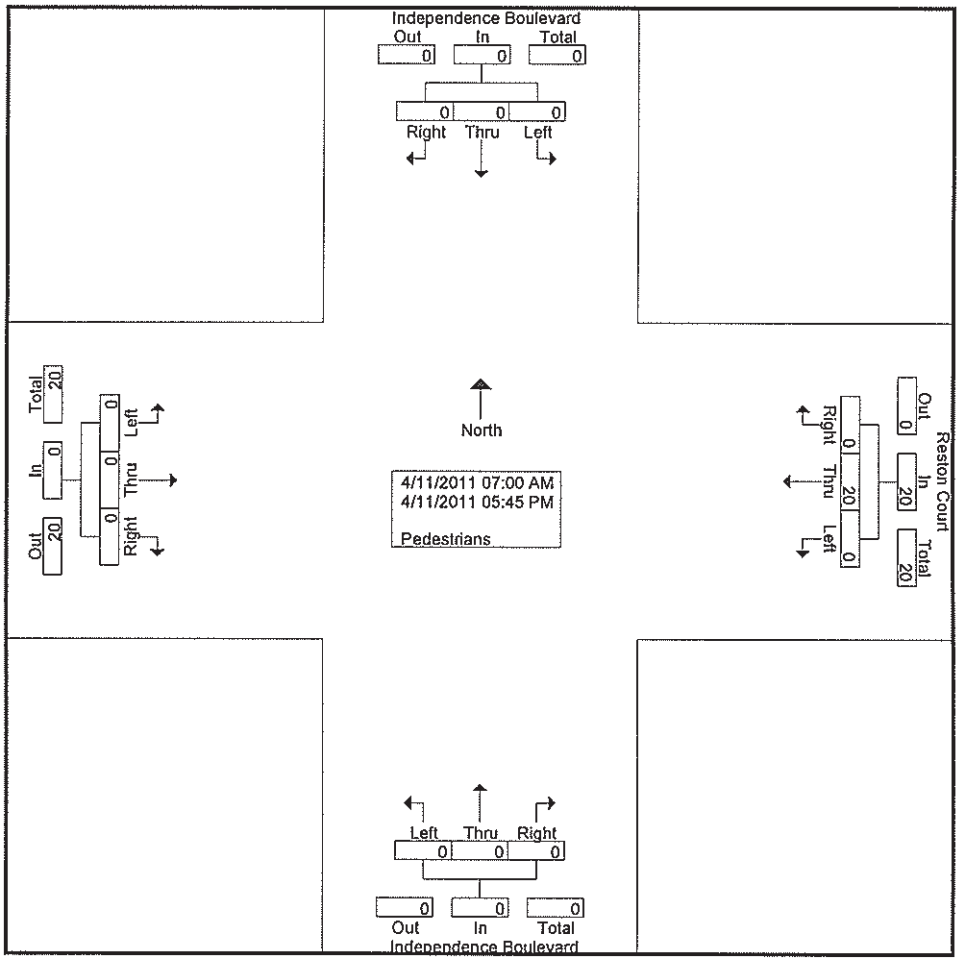
File Name : Independence@Reston
Site Code : 04111101
Start Date : 4/11/2011
Page No : 2