RAMEY KEMP & ASSOCIATES
5808 Faringdon Place, Suite 100
Raleigh, NC 27609
PH: 919 872-5115
FX: 919 878-5416

File Name : College@Shipyard-LongLeaf
Site Code : 04121101
Start Date : 4/12/2011
Page No : 1

Groups Printed- All Vehicles

	College Road Southbound				Long Leaf Drive Westbound				College Road Northbound				Shipyard Boulevard Eastbound						
Start Time	Left	Thru	Right	Trucks	Left	Thru	Right	Trucks	Left	Thru	Right	Trucks	Left	Thru	Right	Trucks	Exclu. Total	Inclu. Total	Int. Total
07:00 AM	1	144	116	6	5	14	5	0	7	298	8	2	65	12	1	4	12	676	688
07:15 AM	4	197	127	7	12	21	5	0	5	403	27	5	59	15	1	3	15	876	891
07:30 AM	3	294	282	10	18	32	12	0	5	458	24	0	99	22	3	11	21	1252	1273
07:45 AM	13	288	348	10	61	73	24	0	15	454	43	3	115	32	2	10	23	1468	1491
Total	21	923	873	33	96	140	46	0	32	1613	102	10	338	81	7	28	71	4272	4343
08:00 AM	21	257	344	21	23	76	8	3	29	396	40	3	102	41	1	4	31	1338	1369
08:15 AM	19	242	371	13	14	92	5	0	70	339	47	9	108	65	4	7	29	1376	1405
08:30 AM	5	233	208	10	12	36	7	1	12	341	26	2	110	27	2	6	19	1019	1038
08:45 AM	5	212	245	16	8	24	9	1	11	349	41	3	115	29	2	4	24	1050	1074
Total	50	944	1168	60	57	228	29	5	122	1425	154	17	435	162	9	21	103	4783	4886
*** Break / No Volume ***																			
04:00 PM	7	379	167	5	16	20	6	0	9	241	23	4	139	66	7	2	11	1080	1091
04:15 PM	10	413	181	9	23	22	6	0	11	237	26	2	150	36	4	2	13	1119	1132
04:30 PM	13	435	177	5	20	22	9	1	15	234	23	7	150	53	4	1	14	1155	1169
04:45 PM	10	419	183	6	22	19	10	0	11	234	21	0	159	44	5	0	6	1137	1143
Total	40	1646	708	25	81	83	31	1	46	946	93	13	598	199	20	5	44	4491	4535
05:00 PM	14	461	127	8	12	24	12	0	7	250	24	2	183	60	8	1	11	1182	1193
05:15 PM	8	530	160	4	26	27	9	0	6	264	27	1	199	82	2	1	6	1340	1346
05:30 PM	15	466	191	6	28	56	7	0	11	271	24	3	154	53	2	2	11	1278	1289
05:45 PM	9	472	134	4	21	17	8	0	17	291	24	2	133	39	4	4	10	1169	1179
Total	46	1929	612	22	87	124	36	0	41	1076	99	8	669	234	16	8	38	4969	5007
Grand Total	157	5442	3361	140	321	575	142	6	241	5060	448	48	2040	676	52	62	256	18515	18771
Apprch %	1.8	60.7	37.5		30.9	55.4	13.7		4.2	88	7.8		73.7	24.4	1.9				
Total %	0.8	29.4	18.2		1.7	3.1	0.8		1.3	27.3	2.4		11	3.7	0.3		1.4	98.6	

RAMEY KEMP & ASSOCIATES
5808 Faringdon Place, Suite 100
Raleigh, NC 27609
PH: 919 872-5115
FX: 919 878-5416

File Name : College@Shipyard-LongLeaf
Site Code : 04121101
Start Date : 4/12/2011
Page No : 2

	College Road Southbound				Long Leaf Drive Westbound				College Road Northbound				Shipyard Boulevard Eastbound				
Start Time	Left	Thru	Right	App. Total	Left	Thru	Right	App. Total	Left	Thru	Right	App. Total	Left	Thru	Right	App. Total	Int. Total
Peak Hour Analysis From 07:00 AM to 11:45 AM - Peak 1 of 1																	
Peak Hour for Entire Intersection Begins at 07:30 AM																	
07:30 AM	3	294	282	579	18	32	12	62	5	458	24	487	99	22	3	124	1252
07:45 AM	13	288	348	649	61	73	24	158	15	454	43	512	115	32	2	149	1468
08:00 AM	21	257	344	622	23	76	8	107	29	396	40	465	102	41	1	144	1338
08:15 AM	19	242	371	632	14	92	5	111	70	339	47	456	108	65	4	177	1376
Total Volume	56	1081	1345	2482	116	273	49	438	119	1647	154	1920	424	160	10	594	5434
% App. Total	2.3	43.6	54.2		26.5	62.3	11.2		6.2	85.8	8		71.4	26.9	1.7		
PHF	.667	.919	.906	.956	.475	.742	.510	.693	.425	.899	.819	.938	.922	.615	.625	.839	.925

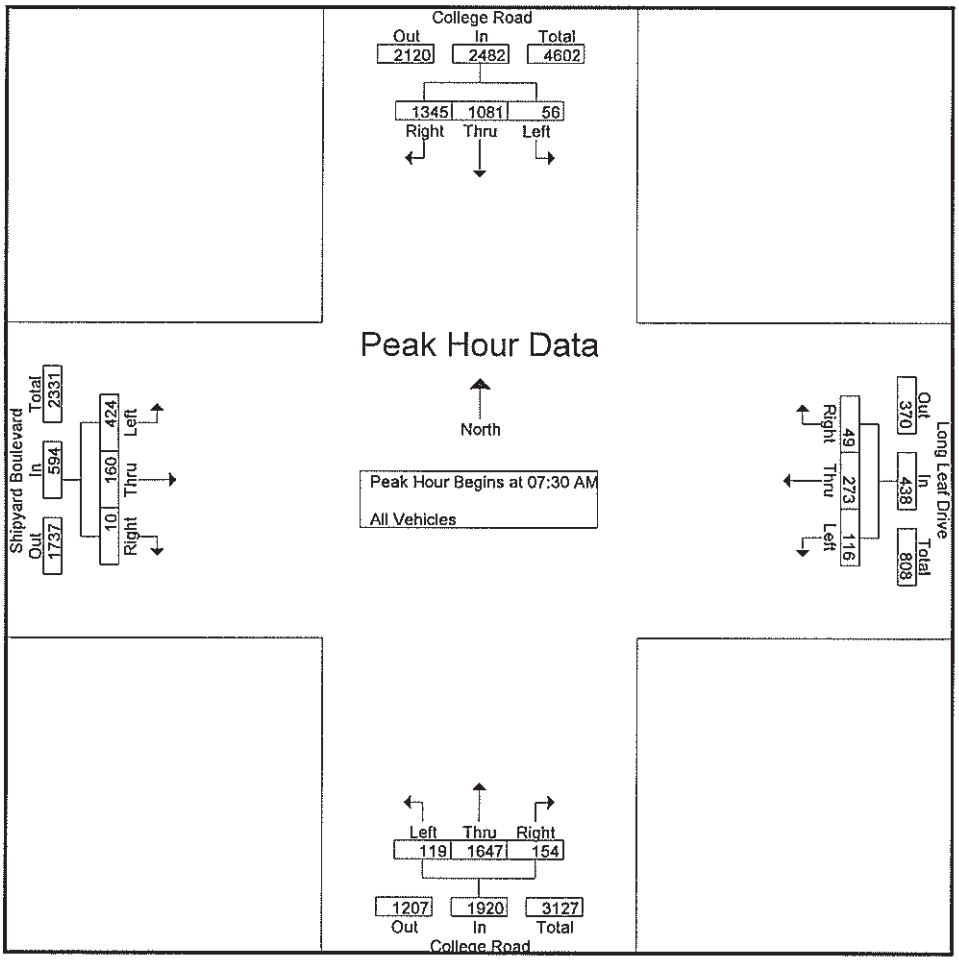

RAMEY KEMP & ASSOCIATES
5808 Faringdon Place, Suite 100
Raleigh, NC 27609
PH: 919 872-5115
FX: 919 878-5416

File Name : College@Shipyard-LongLeaf
Site Code : 04121101
Start Date : 4/12/2011
Page No : 3

	College Road Southbound				Long Leaf Drive Westbound				College Road Northbound				Shipyard Boulevard Eastbound				
Start Time	Left	Thru	Right	App. Total	Left	Thru	Right	App. Total	Left	Thru	Right	App. Total	Left	Thru	Right	App. Total	Int. Total
Peak Hour Analysis From 12:00 PM to 05:45 PM - Peak 1 of 1																	
Peak Hour for Entire Intersection Begins at 05:00 PM																	
05:00 PM	14	461	127	602	12	24	12	48	7	250	24	281	183	60	8	251	1182
05:15 PM	8	530	160	698	26	27	9	62	6	264	27	297	199	82	2	283	1340
05:30 PM	15	466	191	672	28	56	7	91	11	271	24	306	154	53	2	209	1278
05:45 PM	9	472	134	615	21	17	8	46	17	291	24	332	133	39	4	176	1169
Total Volume	46	1929	612	2587	87	124	36	247	41	1076	99	1216	669	234	16	919	4969
% App. Total	1.8	74.6	23.7		35.2	50.2	14.6		3.4	88.5	8.1		72.8	25.5	1.7		
PHF	.767	.910	.801	.927	.777	.554	.750	.679	.603	.924	.917	.916	.840	.713	.500	.812	.927

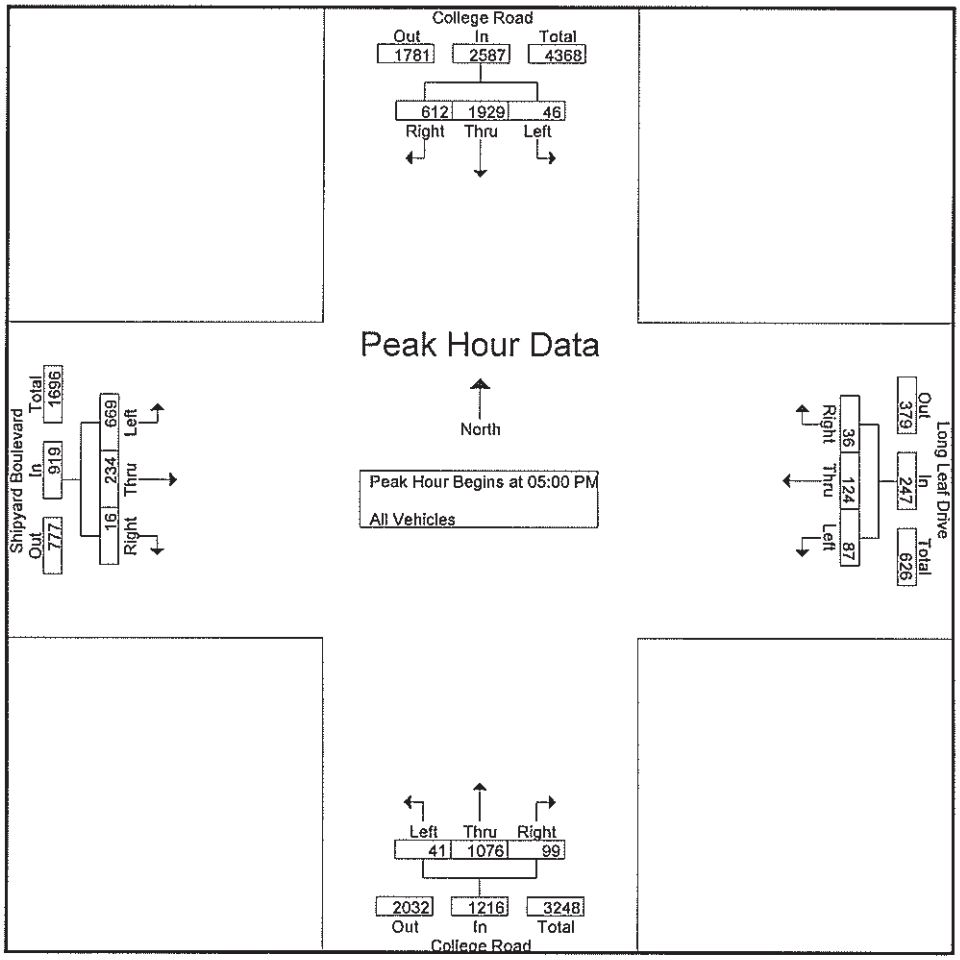

RAMEY KEMP & ASSOCIATES
5808 Faringdon Place, Suite 100
Raleigh, NC 27609
PH: 919 872-5115
FX: 919 878-5416

File Name : College@Shipyard-LongLeaf
Site Code : 04121101
Start Date : 4/12/2011
Page No : 1

Groups Printed- Turns

	College Road Southbound				Long Leaf Drive Westbound				College Road Northbound				Shipyard Boulevard Eastbound						
Start Time	Left	Thru	Right	Trucks	Left	Thru	Right	Trucks	Left	Thru	Right	Trucks	Left	Thru	Right	Trucks	Exclu. Total	Inclu. Total	Int. Total
*** Break / No Volume ***																			
08:15 AM	0	0	0	0	0	0	0	0	0	0	0	0	1	0	0	0	0	1	1
08:30 AM	0	0	0	0	0	0	0	0	1	0	0	0	0	0	0	0	0	1	1
*** Break / No Volume ***																			
Total	0	0	0	0	0	0	0	0	1	0	0	0	1	0	0	0	0	2	2
*** Break / No Volume ***																			
04:30 PM	0	0	0	0	0	0	0	0	1	0	0	0	0	0	0	0	0	1	1
04:45 PM	0	0	0	0	0	0	0	0	1	0	0	0	0	0	0	0	0	1	1
Total	0	0	0	0	0	0	0	0	2	0	0	0	0	0	0	0	0	2	2
05:00 PM	1	0	0	0	0	0	0	0	2	0	0	0	0	0	0	0	0	3	3
05:15 PM	0	0	0	0	0	0	0	0	1	0	0	0	0	0	0	0	0	1	1
05:30 PM	0	0	0	0	0	0	0	0	1	0	0	0	0	0	0	0	0	1	1
05:45 PM	0	0	0	0	0	0	0	0	3	0	0	0	0	0	0	0	0	3	3
Total	1	0	0	0	0	0	0	0	7	0	0	0	0	0	0	0	0	8	8
Grand Total	1	0	0	0	0	0	0	0	10	0	0	0	1	0	0	0	0	12	12
Apprch %	100	0	0		0	0	0		100	0	0		100	0	0				
Total %	8.3	0	0		0	0	0		83.3	0	0		8.3	0	0		0	100	

RAMEY KEMP & ASSOCIATES
5808 Faringdon Place, Suite 100
Raleigh, NC 27609
PH: 919 872-5115
FX: 919 878-5416

File Name : College@Shipyard-LongLeaf
Site Code : 04121101
Start Date : 4/12/2011
Page No : 2

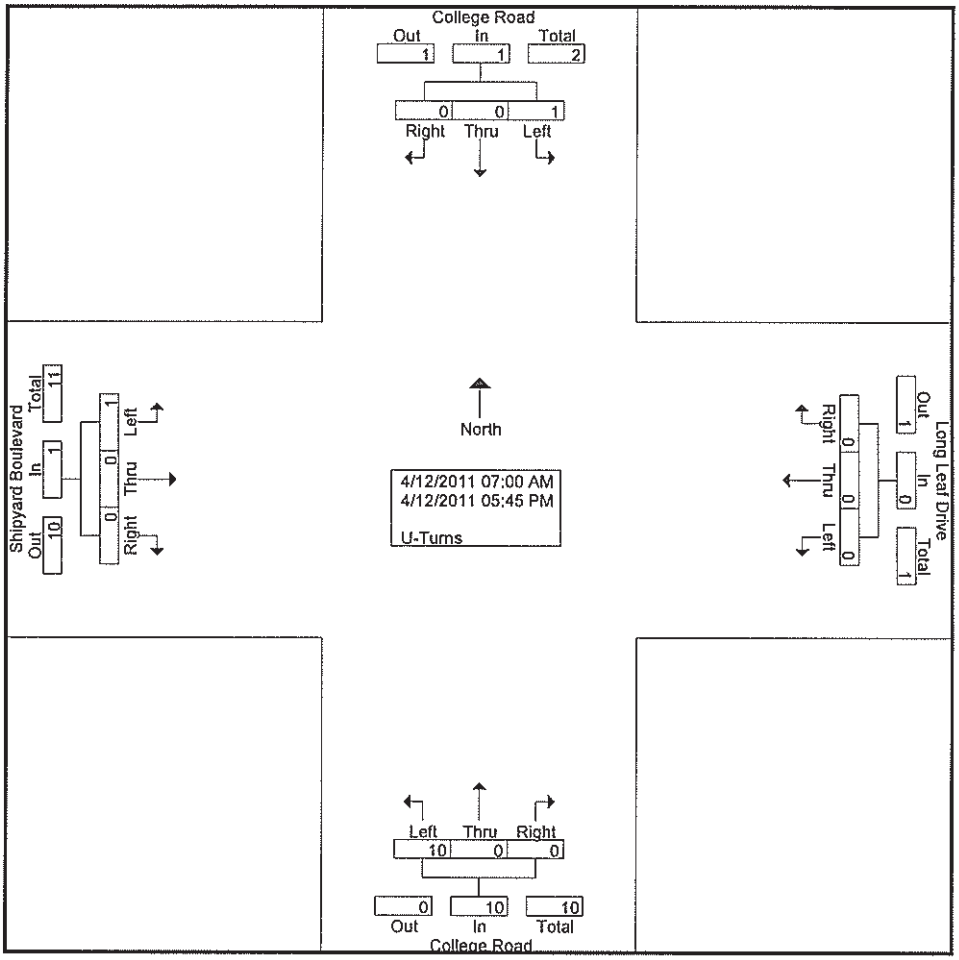

RAMEY KEMP & ASSOCIATES

5808 Faringdon Place, Suite 100
Raleigh, NC 27609
PH: 919 872-5115
FX: 919 878-5416

File Name : College@Shipyard-LongLeaf
Site Code : 04121101
Start Date : 4/12/2011
Page No : 1

Groups Printed- Pedestrians

	College Road Southbound				Long Leaf Drive Westbound				College Road Northbound				Shipyard Boulevard Eastbound						
Start Time	Left	Thru	Right	Trucks	Left	Thru	Right	Trucks	Left	Thru	Right	Trucks	Left	Thru	Right	Trucks	Exclu. Total	Inclu. Total	Int. Total
*** Break / No Volume ***																			
04:15 PM	0	1	0	0	0	0	0	0	0	0	0	0	0	1	0	0	0	2	2
*** Break / No Volume ***																			
Total	0	1	0	0	0	0	0	0	0	0	0	0	0	1	0	0	0	2	2
*** Break / No Volume ***																			
05:15 PM	0	0	0	0	0	1	0	0	0	0	0	0	0	0	0	0	0	1	1
*** Break / No Volume ***																			
Total	0	0	0	0	0	1	0	0	0	0	0	0	0	0	0	0	0	1	1
Grand Total	0	1	0	0	0	1	0	0	0	0	0	0	0	1	0	0	0	3	3
Apprch %	0	100	0		0	100	0		0	0	0		0	100	0				
Total %	0	33.3	0		0	33.3	0		0	0	0		0	33.3	0		0	100	

RAMEY KEMP & ASSOCIATES
5808 Faringdon Place, Suite 100
Raleigh, NC 27609
PH: 919 872-5115
FX: 919 878-5416
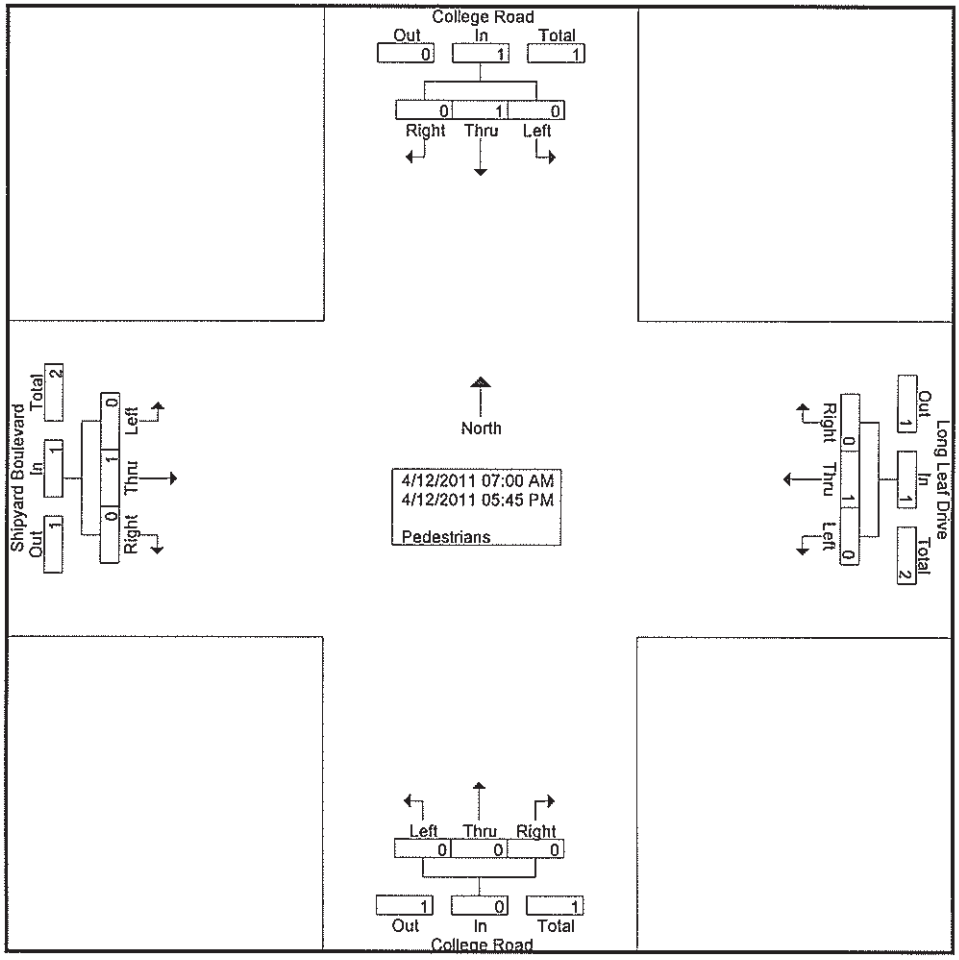
File Name : College@Shipyard-LongLeaf
Site Code : 04121101
Start Date : 4/12/2011
Page No : 2