RAMEY KEMP & ASSOCIATES
5808 Faringdon Place, Suite 100
Raleigh, NC 27609
PH: 919 872-5115
FX: 919 878-5416

File Name : College@HollyTree
Site Code : 04132011
Start Date : 4/13/2011
Page No : 1

Groups Printed- All Vehicles

	College Road Southbound				Holly Tree Road Westbound				College Road Northbound				Holly Tree Road Eastbound						
Start Time	Left	Thru	Right	Trucks	Left	Thru	Right	Trucks	Left	Thru	Right	Trucks	Left	Thru	Right	Trucks	Exclu. Total	Inclu. Total	Int. Total
06:45 AM	12	139	5	3	0	0	0	0	0	0	0	0	1	9	6	1	4	172	176
Total	12	139	5	3	0	0	0	0	0	0	0	0	1	9	6	1	4	172	176
07:00 AM	14	164	6	2	8	35	11	0	30	324	12	6	2	13	8	0	8	627	635
07:15 AM	21	202	6	9	19	53	25	0	61	411	26	5	2	25	17	0	14	868	882
07:30 AM	19	299	2	5	41	70	40	0	62	488	48	6	2	26	14	2	13	1111	1124
07:45 AM	17	239	9	14	67	140	80	0	110	534	89	13	5	20	16	0	27	1326	1353
Total	71	904	23	30	135	298	156	0	263	1757	175	30	11	84	55	2	62	3932	3994
08:00 AM	28	181	10	7	48	112	97	0	115	489	30	1	7	15	34	0	8	1166	1174
08:15 AM	31	204	8	11	31	90	103	1	109	496	38	4	1	29	41	0	16	1181	1197
08:30 AM	14	171	8	6	16	51	25	1	47	413	24	3	7	18	22	0	10	816	826
08:45 AM	0	0	0	0	37	80	49	0	76	443	34	12	0	0	0	0	12	719	731
Total	73	556	26	24	132	333	274	2	347	1841	126	20	15	62	97	0	46	3882	3928
*** Break / No Volume ***																			
04:00 PM	43	358	10	7	32	33	18	2	27	303	25	5	3	46	46	1	15	944	959
04:15 PM	45	395	9	5	27	44	20	0	43	323	33	9	6	46	73	0	14	1064	1078
04:30 PM	50	367	13	5	23	32	24	0	44	313	42	5	5	44	77	1	11	1034	1045
04:45 PM	45	465	7	9	36	29	37	0	43	322	28	12	8	51	50	0	21	1121	1142
Total	183	1585	39	26	118	138	99	2	157	1261	128	31	22	187	246	2	61	4163	4224
05:00 PM	49	480	6	1	31	31	31	0	31	273	31	4	14	48	74	1	6	1099	1105
05:15 PM	57	540	8	1	38	34	40	3	22	324	20	7	8	59	71	0	11	1221	1232
05:30 PM	56	530	12	3	30	27	27	0	41	328	29	6	9	58	75	1	10	1222	1232
05:45 PM	70	518	16	3	30	33	22	3	57	318	37	7	9	55	67	1	14	1232	1246
Total	232	2068	42	8	129	125	120	6	151	1243	117	24	40	220	287	3	41	4774	4815
Grand Total	571	5252	135	91	514	894	649	10	918	6102	546	105	89	562	691	8	214	16923	17137
Apprch %	9.6	88.2	2.3		25	43.5	31.6		12.1	80.7	7.2		6.6	41.9	51.5				
Total %	3.4	31	0.8		3	5.3	3.8		5.4	36.1	3.2		0.5	3.3	4.1		1.2	98.8	

RAMEY KEMP & ASSOCIATES
5808 Faringdon Place, Suite 100
Raleigh, NC 27609
PH: 919 872-5115
FX: 919 878-5416

File Name : College@HollyTree
Site Code : 04132011
Start Date : 4/13/2011
Page No : 2

	College Road Southbound				Holly Tree Road Westbound				College Road Northbound				Holly Tree Road Eastbound				
Start Time	Left	Thru	Right	App. Total	Left	Thru	Right	App. Total	Left	Thru	Right	App. Total	Left	Thru	Right	App. Total	Int. Total
Peak Hour Analysis From 06:45 AM to 11:45 AM - Peak 1 of 1																	
Peak Hour for Entire Intersection Begins at 07:30 AM																	
07:30 AM	19	299	2	320	41	70	40	151	62	488	48	598	2	26	14	42	1111
07:45 AM	17	239	9	265	67	140	80	287	110	534	89	733	5	20	16	41	1326
08:00 AM	28	181	10	219	48	112	97	257	115	489	30	634	7	15	34	56	1166
08:15 AM	31	204	8	243	31	90	103	224	109	496	38	643	1	29	41	71	1181
Total Volume	95	923	29	1047	187	412	320	919	396	2007	205	2608	15	90	105	210	4784
% App. Total	9.1	88.2	2.8		20.3	44.8	34.8		15.2	77	7.9		7.1	42.9	50		
PHF	.766	.772	.725	.818	.698	.736	.777	.801	.861	.940	.576	.889	.536	.776	.640	.739	.902

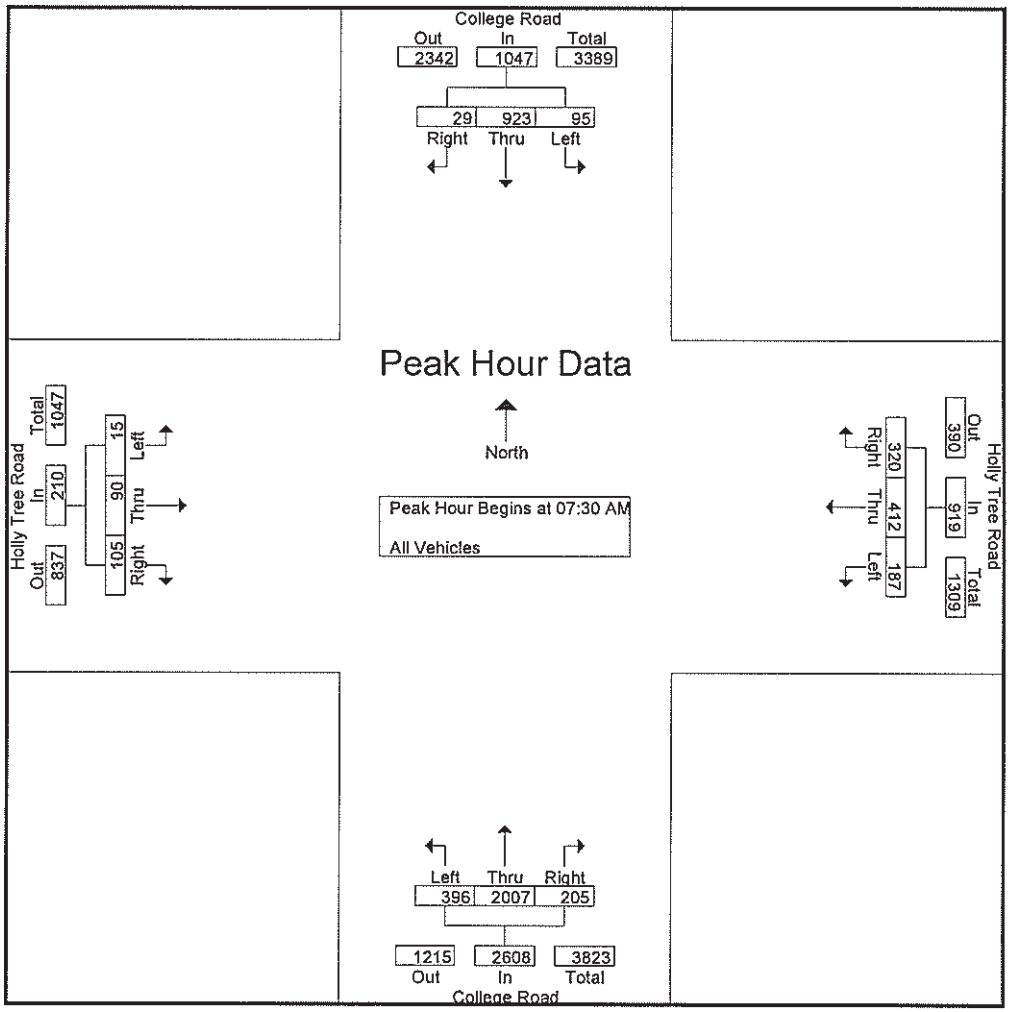

RAMEY KEMP & ASSOCIATES
5808 Faringdon Place, Suite 100
Raleigh, NC 27609
PH: 919 872-5115
FX: 919 878-5416

File Name : College@HollyTree
Site Code : 04132011
Start Date : 4/13/2011
Page No : 3

	College Road Southbound				Holly Tree Road Westbound				College Road Northbound				Holly Tree Road Eastbound				
Start Time	Left	Thru	Right	App. Total	Left	Thru	Right	App. Total	Left	Thru	Right	App. Total	Left	Thru	Right	App. Total	Int. Total
Peak Hour Analysis From 12:00 PM to 05:45 PM - Peak 1 of 1																	
Peak Hour for Entire Intersection Begins at 05:00 PM																	
05:00 PM	49	480	6	535	31	31	31	93	31	273	31	335	14	48	74	136	1099
05:15 PM	57	540	8	605	38	34	40	112	22	324	20	366	8	59	71	138	1221
05:30 PM	56	530	12	598	30	27	27	84	41	328	29	398	9	58	75	142	1222
05:45 PM	70	518	16	604	30	33	22	85	57	318	37	412	9	55	67	131	1232
Total Volume	232	2068	42	2342	129	125	120	374	151	1243	117	1511	40	220	287	547	4774
% App. Total	9.9	88.3	1.8		34.5	33.4	32.1		10	82.3	7.7		7.3	40.2	52.5		
PHF	.829	.957	.656	.968	.849	.919	.750	.835	.662	.947	.791	.917	.714	.932	.957	.963	.969

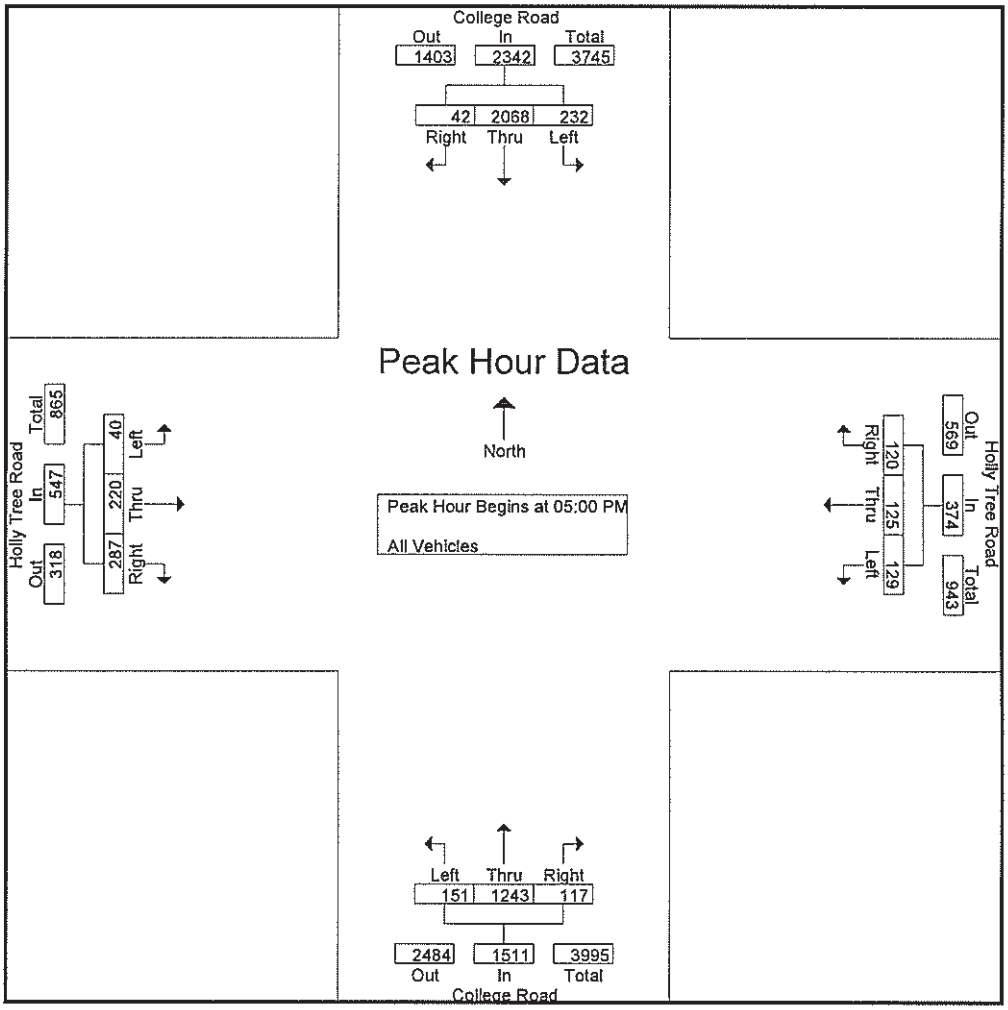

RAMEY KEMP & ASSOCIATES
5808 Faringdon Place, Suite 100
Raleigh, NC 27609
PH: 919 872-5115
FX: 919 878-5416

File Name : College@HollyTree
Site Code : 04132011
Start Date : 4/13/2011
Page No : 1

Groups Printed- U Turns

	College Road Southbound				Holly Tree Road Westbound				College Road Northbound				Holly Tree Road Eastbound						
Start Time	Left	Thru	Right	Trucks	Left	Thru	Right	Trucks	Left	Thru	Right	Trucks	Left	Thru	Right	Trucks	Exclu. Total	Inclu. Total	Int. Total
*** Break / No Volume ***																			
07:00 AM	1	0	0	0	0	0	0	0	0	0	0	0	0	0	0	0	0	1	1
*** Break / No Volume ***																			
07:45 AM	1	0	0	0	0	0	0	0	0	0	0	0	0	0	0	0	0	1	1
Total	2	0	0	0	0	0	0	0	0	0	0	0	0	0	0	0	0	2	2
08:00 AM	1	0	0	0	0	0	0	0	0	0	0	0	0	0	0	0	0	1	1
08:15 AM	4	0	0	0	0	0	0	0	0	0	0	0	0	0	0	0	0	4	4
08:30 AM	3	0	0	0	0	0	0	0	0	0	0	0	0	0	0	0	0	3	3
*** Break / No Volume ***																			
Total	8	0	0	0	0	0	0	0	0	0	0	0	0	0	0	0	0	8	8
*** Break / No Volume ***																			
04:00 PM	2	0	0	0	0	0	0	0	1	0	0	0	0	0	0	0	0	3	3
04:15 PM	4	0	0	0	0	0	0	0	2	0	0	0	0	0	0	0	0	6	6
04:30 PM	5	0	0	0	0	0	0	0	0	0	0	0	0	0	0	0	0	5	5
04:45 PM	7	0	0	0	0	0	0	0	0	0	0	0	0	0	0	0	0	7	7
Total	18	0	0	0	0	0	0	0	3	0	0	0	0	0	0	0	0	21	21
05:00 PM	12	0	0	0	0	0	0	0	2	0	0	0	0	0	0	0	0	14	14
05:15 PM	7	0	0	0	0	0	0	0	2	0	0	0	0	0	0	0	0	9	9
05:30 PM	7	0	0	0	0	0	0	0	0	0	0	0	0	0	0	0	0	7	7
05:45 PM	9	0	0	0	0	0	0	0	2	0	0	0	0	0	0	0	0	11	11
Total	35	0	0	0	0	0	0	0	6	0	0	0	0	0	0	0	0	41	41
Grand Total	63	0	0	0	0	0	0	0	9	0	0	0	0	0	0	0	0	72	72
Apprch %	100	0	0		0	0	0		100	0	0		0	0	0				
Total %	87.5	0	0		0	0	0		12.5	0	0		0	0	0		0	100	

RAMEY KEMP & ASSOCIATES
5808 Faringdon Place, Suite 100
Raleigh, NC 27609
PH: 919 872-5115
FX: 919 878-5416

File Name : College@HollyTree
Site Code : 04132011
Start Date : 4/13/2011
Page No : 2

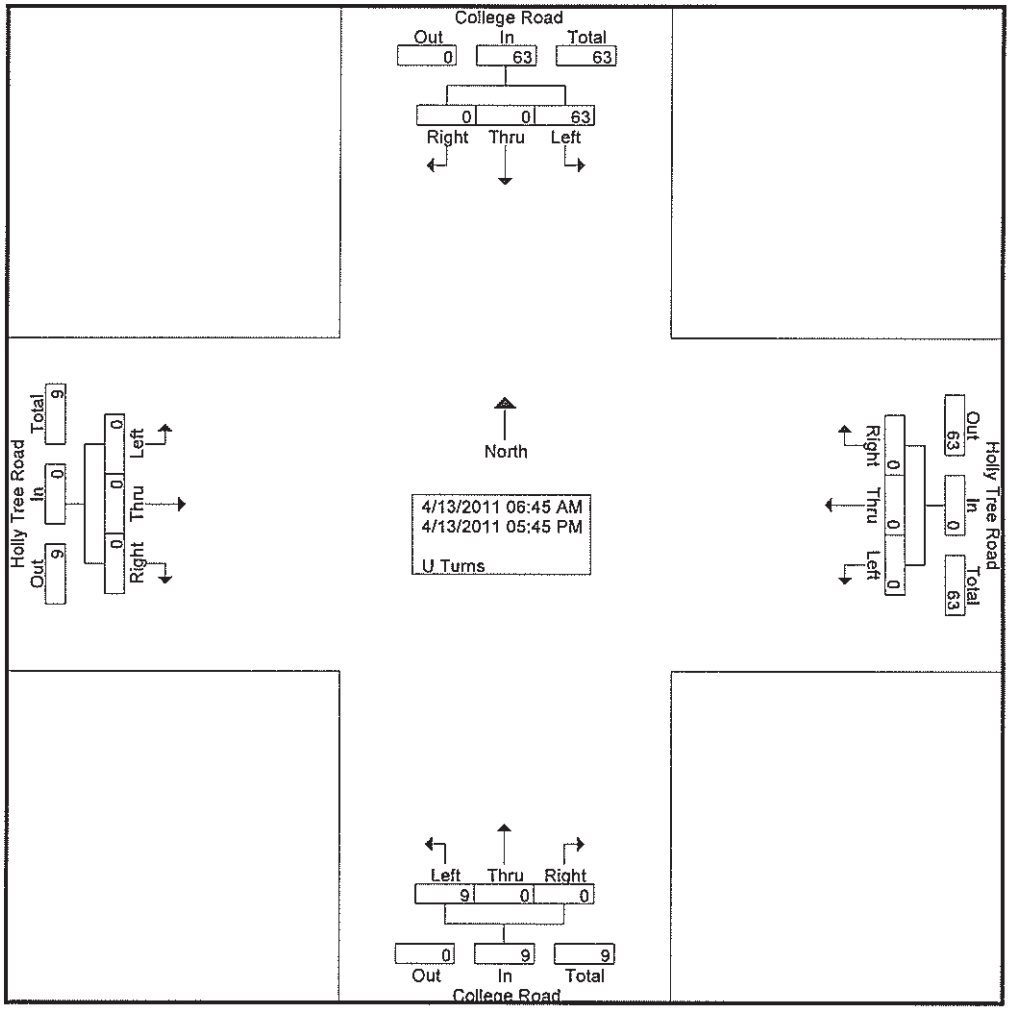

RAMEY KEMP & ASSOCIATES
5808 Faringdon Place, Suite 100
Raleigh, NC 27609
PH: 919 872-5115
FX: 919 878-5416

File Name : College@HollyTree
Site Code : 04132011
Start Date : 4/13/2011
Page No : 1

Groups Printed- Pedestrians

	College Road Southbound				Holly Tree Road Westbound				College Road Northbound				Holly Tree Road Eastbound						
Start Time	Left	Thru	Right	Trucks	Left	Thru	Right	Trucks	Left	Thru	Right	Trucks	Left	Thru	Right	Trucks	Exclu. Total	Inclu. Total	Int. Total
*** Break / No Volume ***																			
07:00 AM	0	1	0	0	0	1	0	0	0	0	0	0	0	0	0	0	0	2	2
07:15 AM	0	0	0	0	0	0	0	0	0	0	0	0	0	1	0	0	0	1	1
07:30 AM	0	1	0	0	0	0	0	0	0	0	0	0	0	0	0	0	0	1	1
07:45 AM	0	1	0	0	0	0	0	0	0	0	0	0	0	0	0	0	0	1	1
Total	0	3	0	0	0	1	0	0	0	0	0	0	0	1	0	0	0	5	5
08:00 AM	0	1	0	0	0	0	0	0	0	0	0	0	0	1	0	0	0	2	2
08:15 AM	0	0	0	0	0	0	0	0	0	2	0	0	0	3	0	0	0	5	5
08:30 AM	0	0	0	0	0	0	0	0	0	0	0	0	0	1	0	0	0	1	1
*** Break / No Volume ***																			
Total	0	1	0	0	0	0	0	0	0	2	0	0	0	5	0	0	0	8	8
*** Break / No Volume ***																			
04:00 PM	0	0	0	0	0	0	0	0	0	0	0	0	0	1	0	0	0	1	1
*** Break / No Volume ***																			
Total	0	0	0	0	0	0	0	0	0	0	0	0	0	1	0	0	0	1	1
*** Break / No Volume ***																			
05:30 PM	0	0	0	0	0	0	0	0	0	1	0	0	0	1	0	0	0	2	2
05:45 PM	0	1	0	0	0	1	0	0	0	0	0	0	0	0	0	0	0	2	2
Total	0	1	0	0	0	1	0	0	0	1	0	0	0	1	0	0	0	4	4
Grand Total	0	5	0	0	0	2	0	0	0	3	0	0	0	8	0	0	0	18	18
Apprch %	0	100	0		0	100	0		0	100	0		0	100	0				
Total %	0	27.8	0		0	11.1	0		0	16.7	0		0	44.4	0		0	100	

RAMEY KEMP & ASSOCIATES
5808 Faringdon Place, Suite 100
Raleigh, NC 27609
PH: 919 872-5115
FX: 919 878-5416
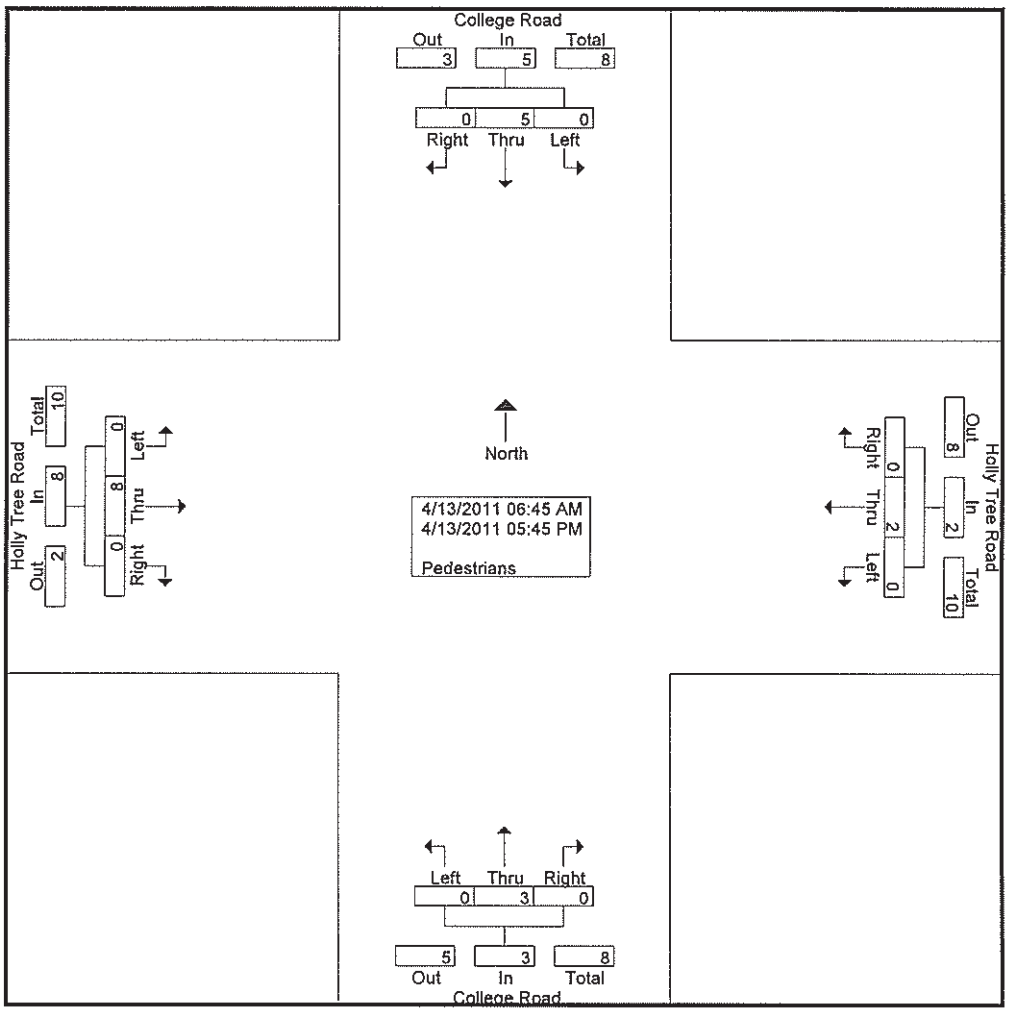
File Name : College@HollyTree
Site Code : 04132011
Start Date : 4/13/2011
Page No : 2