RAMEY KEMP & ASSOCIATES
5808 Faringdon Place, Suite 100
Raleigh, NC 27609
PH: 919 872-5115
FX: 919 878-5416

File Name : Oleander@Independence
Site Code : 04142011
Start Date : 4/14/2011
Page No : 1

Groups Printed- All Vehicles

	Independence Boulevard Southbound				Oleander Drive Westbound				Independence Boulevard Northbound				Oleander Drive Eastbound						
Start Time	Left	Thru	Right	Trucks	Left	Thru	Right	Trucks	Left	Thru	Right	Trucks	Left	Thru	Right	Trucks	Exclu. Total	Inclu. Total	Int. Total
07:00 AM	5	49	2	0	18	133	10	4	17	67	4	0	25	117	24	2	6	471	477
07:15 AM	4	74	14	1	17	125	23	1	20	79	6	0	21	145	28	3	5	556	561
07:30 AM	9	110	17	2	27	184	13	1	17	120	8	3	36	162	44	6	12	747	759
07:45 AM	19	163	18	4	41	221	31	2	38	166	17	3	33	173	54	4	13	974	987
Total	37	396	51	7	103	663	77	8	92	432	35	6	115	597	150	15	36	2748	2784
08:00 AM	40	85	15	2	34	222	35	4	36	149	11	2	46	214	25	2	10	912	922
08:15 AM	24	105	15	4	42	181	23	2	26	141	18	1	45	226	25	11	18	871	889
08:30 AM	26	125	20	4	25	133	29	3	26	142	26	3	42	155	26	6	16	775	791
08:45 AM	45	114	18	3	22	157	13	5	25	120	24	3	34	129	32	2	13	733	746
Total	135	429	68	13	123	693	100	14	113	552	79	9	167	724	108	21	57	3291	3348
*** Break / No Volume ***																			
04:00 PM	48	144	27	1	49	232	52	4	42	146	33	0	52	223	39	3	8	1087	1095
04:15 PM	66	154	37	2	53	219	58	2	44	153	25	3	76	285	32	4	11	1202	1213
04:30 PM	58	132	23	0	51	224	55	0	50	151	47	14	71	250	39	3	17	1151	1168
04:45 PM	70	179	19	0	41	230	39	5	64	142	40	1	60	352	23	3	9	1259	1268
Total	242	609	106	3	194	905	204	11	200	592	145	18	259	1110	133	13	45	4699	4744
05:00 PM	93	216	31	0	53	237	60	0	47	176	24	0	64	342	35	4	4	1378	1382
05:15 PM	50	182	16	1	52	257	65	6	49	164	38	0	88	343	50	1	8	1354	1362
05:30 PM	80	170	19	0	65	238	52	6	45	164	19	1	84	244	49	4	11	1229	1240
05:45 PM	53	176	29	0	33	212	51	2	32	159	40	0	62	296	30	3	5	1173	1178
Total	276	744	95	1	203	944	228	14	173	663	121	1	298	1225	164	12	28	5134	5162
Grand Total	690	2178	320	24	623	3205	609	47	578	2239	380	34	839	3656	555	61	166	15872	16038
Apprch %	21.6	68.3	10		14	72.2	13.7		18.1	70	11.9		16.6	72.4	11				
Total %	4.3	13.7	2		3.9	20.2	3.8		3.6	14.1	2.4		5.3	23	3.5		1	99	

RAMEY KEMP & ASSOCIATES
5808 Faringdon Place, Suite 100
Raleigh, NC 27609
PH: 919 872-5115
FX: 919 878-5416

File Name : Oleander@Independence
Site Code : 04142011
Start Date : 4/14/2011
Page No : 2

	Independence Boulevard Southbound				Oleander Drive Westbound				Independence Boulevard Northbound				Oleander Drive Eastbound				
Start Time	Left	Thru	Right	App. Total	Left	Thru	Right	App. Total	Left	Thru	Right	App. Total	Left	Thru	Right	App. Total	Int. Total
Peak Hour Analysis From 07:00 AM to 11:45 AM - Peak 1 of 1																	
Peak Hour for Entire Intersection Begins at 07:45 AM																	
07:45 AM	19	163	18	200	41	221	31	293	38	166	17	221	33	173	54	260	974
08:00 AM	40	85	15	140	34	222	35	291	36	149	11	196	46	214	25	285	912
08:15 AM	24	105	15	144	42	181	23	246	26	141	18	185	45	226	25	296	871
08:30 AM	26	125	20	171	25	133	29	187	26	142	26	194	42	155	26	223	775
Total Volume	109	478	68	655	142	757	118	1017	126	598	72	796	166	768	130	1064	3532
% App. Total	16.6	73	10.4		14	74.4	11.6		15.8	75.1	9		15.6	72.2	12.2		
PHF	.681	.733	.850	.819	.845	.852	.843	.868	.829	.901	.692	.900	.902	.850	.602	.899	.907

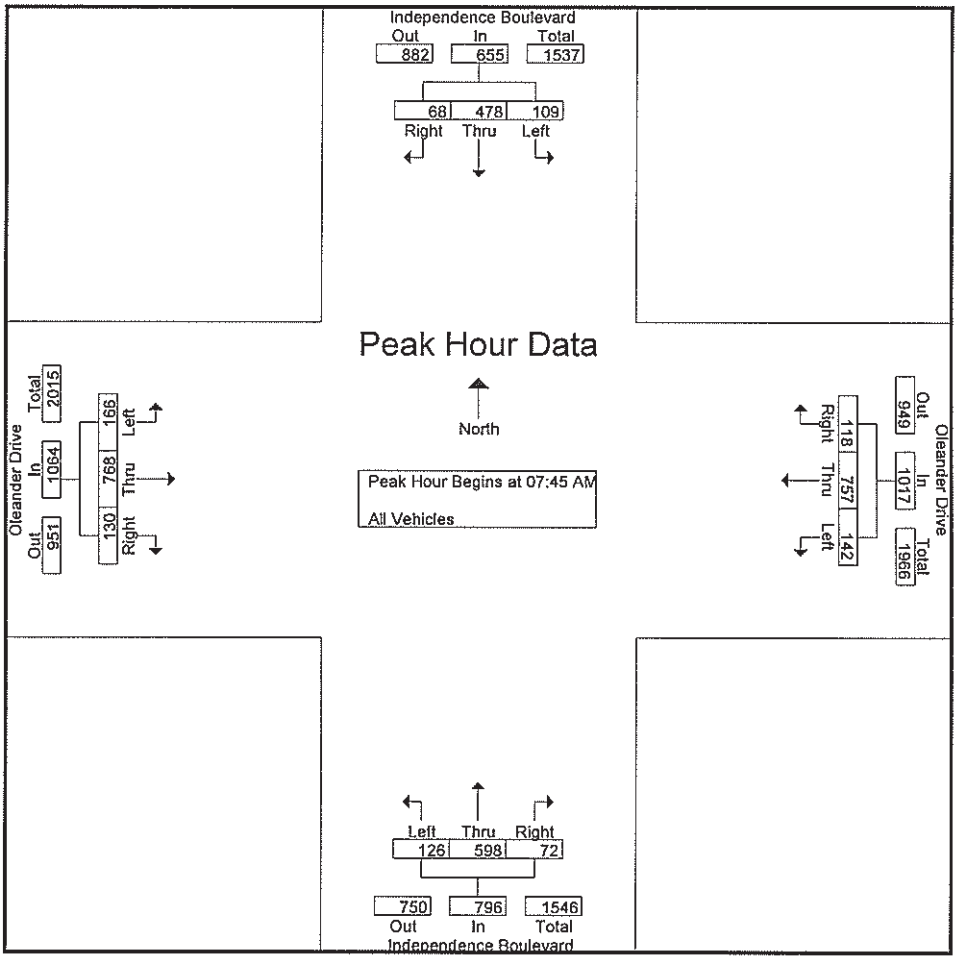

RAMEY KEMP & ASSOCIATES
5808 Faringdon Place, Suite 100
Raleigh, NC 27609
PH: 919 872-5115
FX: 919 878-5416

File Name : Oleander@Independence
Site Code : 04142011
Start Date : 4/14/2011
Page No : 3

	Independence Boulevard Southbound				Oleander Drive Westbound				Independence Boulevard Northbound				Oleander Drive Eastbound				
Start Time	Left	Thru	Right	App. Total	Left	Thru	Right	App. Total	Left	Thru	Right	App. Total	Left	Thru	Right	App. Total	Int. Total
Peak Hour Analysis From 12:00 PM to 05:45 PM - Peak 1 of 1																	
Peak Hour for Entire Intersection Begins at 04:45 PM																	
04:45 PM	70	179	19	268	41	230	39	310	64	142	40	246	60	352	23	435	1259
05:00 PM	93	216	31	340	53	237	60	350	47	176	24	247	64	342	35	441	1378
05:15 PM	50	182	16	248	52	257	65	374	49	164	38	251	88	343	50	481	1354
05:30 PM	80	170	19	269	65	238	52	355	45	164	19	228	84	244	49	377	1229
Total Volume	293	747	85	1125	211	962	216	1389	205	646	121	972	296	1281	157	1734	5220
% App. Total	26	66.4	7.6		15.2	69.3	15.6		21.1	66.5	12.4		17.1	73.9	9.1		
PHF	.788	.865	.685	.827	.812	.936	.831	.928	.801	.918	.756	.968	.841	.910	.785	.901	.947

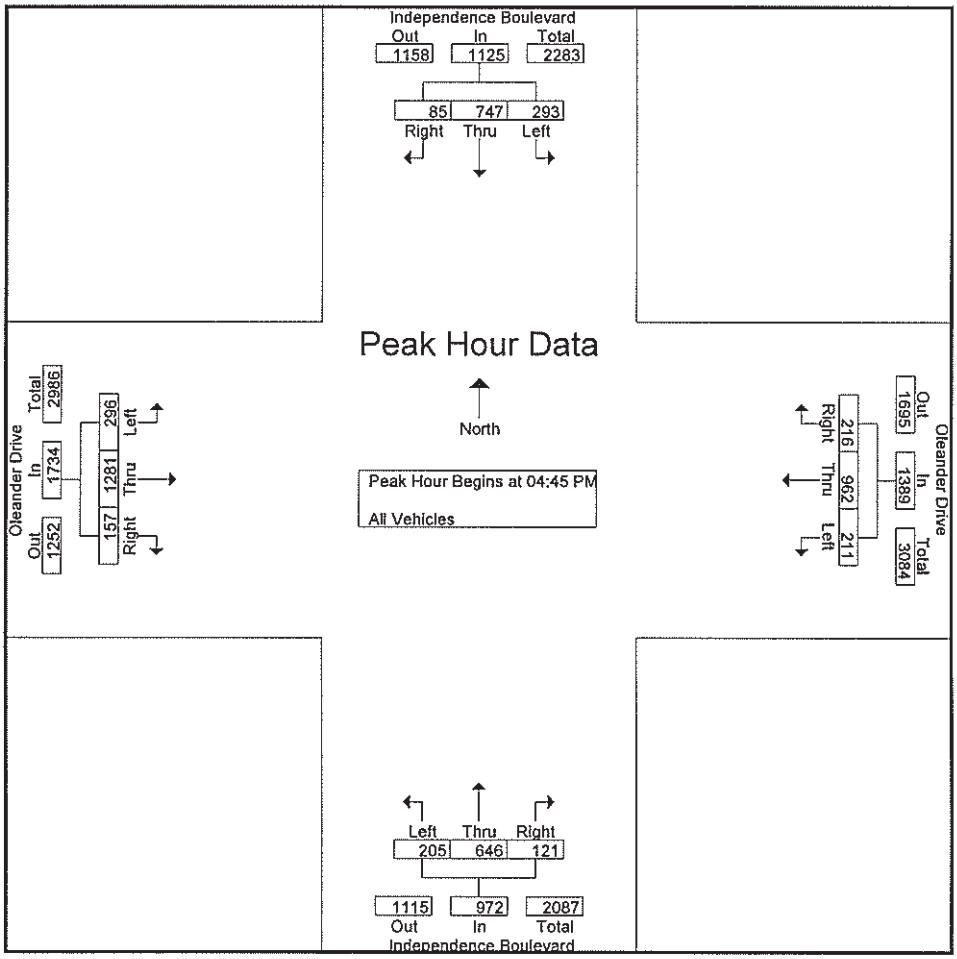

RAMEY KEMP & ASSOCIATES
5808 Faringdon Place, Suite 100
Raleigh, NC 27609
PH: 919 872-5115
FX: 919 878-5416

File Name : Oleander@Independence
Site Code : 04142011
Start Date : 4/14/2011
Page No : 1

Groups Printed- U Turns

	Independence Boulevard Southbound				Oleander Drive Westbound				Independence Boulevard Northbound				Oleander Drive Eastbound						
Start Time	Left	Thru	Right	Trucks	Left	Thru	Right	Trucks	Left	Thru	Right	Trucks	Left	Thru	Right	Trucks	Exclu. Total	Inclu. Total	Int. Total
07:00 AM	1	0	0	0	0	0	0	0	0	0	0	0	0	0	0	0	0	1	1
07:15 AM	0	0	0	0	0	0	0	0	1	0	0	0	0	0	0	0	0	1	1
*** Break / No Volume ***																			
07:45 AM	2	0	0	0	0	0	0	0	0	0	0	0	0	0	0	0	0	2	2
Total	3	0	0	0	0	0	0	0	1	0	0	0	0	0	0	0	0	4	4
*** Break / No Volume ***																			
08:15 AM	1	0	0	0	0	0	0	0	1	0	0	0	0	0	0	0	0	2	2
08:30 AM	0	0	0	0	2	0	0	0	0	0	0	0	0	0	0	0	0	2	2
08:45 AM	0	0	0	0	1	0	0	0	0	0	0	0	0	0	0	0	0	1	1
Total	1	0	0	0	3	0	0	0	1	0	0	0	0	0	0	0	0	5	5
*** Break / No Volume ***																			
04:00 PM	2	0	0	0	2	0	0	0	0	0	0	0	0	0	0	0	0	4	4
04:15 PM	3	0	0	0	3	0	0	0	0	0	0	0	0	0	0	0	0	6	6
04:30 PM	0	0	0	0	4	0	0	0	1	0	0	0	0	0	0	0	0	5	5
04:45 PM	0	0	0	0	2	0	0	0	1	0	0	0	0	0	0	0	0	3	3
Total	5	0	0	0	11	0	0	0	2	0	0	0	0	0	0	0	0	18	18
05:00 PM	0	0	0	0	1	0	0	0	0	0	0	0	0	0	0	0	0	1	1
05:15 PM	1	0	0	0	0	0	0	0	0	0	0	0	0	0	0	0	0	1	1
05:30 PM	0	0	0	0	2	0	0	0	0	0	0	0	0	0	0	0	0	2	2
05:45 PM	1	0	0	0	4	0	0	0	0	0	0	0	0	0	0	0	0	5	5
Total	2	0	0	0	7	0	0	0	0	0	0	0	0	0	0	0	0	9	9
Grand Total	11	0	0	0	21	0	0	0	4	0	0	0	0	0	0	0	0	36	36
Apprch %	100	0	0		100	0	0		100	0	0		0	0	0				
Total %	30.6	0	0		58.3	0	0		11.1	0	0		0	0	0		0	100	

RAMEY KEMP & ASSOCIATES
5808 Faringdon Place, Suite 100
Raleigh, NC 27609
PH: 919 872-5115
FX: 919 878-5416

File Name : Oleander@Independence
Site Code : 04142011
Start Date : 4/14/2011
Page No : 2

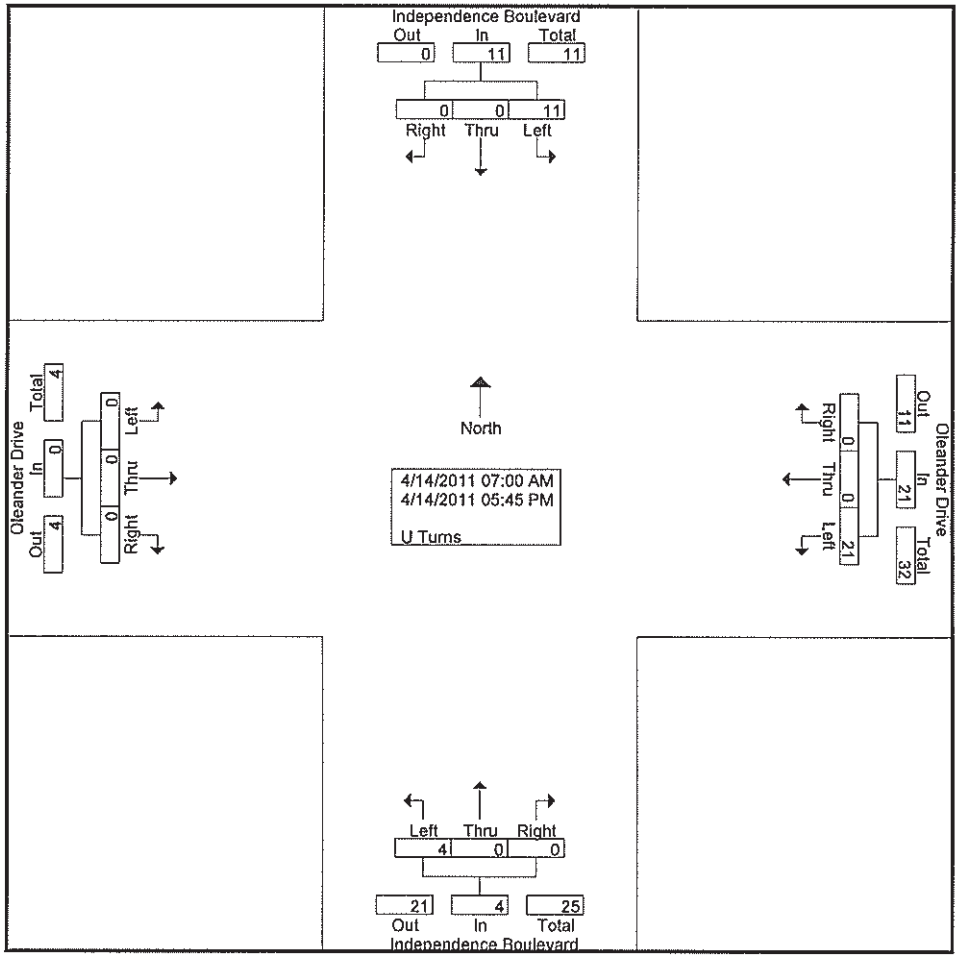

RAMEY KEMP & ASSOCIATES

5808 Faringdon Place, Suite 100
Raleigh, NC 27609
PH: 919 872-5115
FX: 919 878-5416

File Name : Oleander@Independence
Site Code : 04142011
Start Date : 4/14/2011
Page No : 1

Groups Printed- Pedestrians

	Independence Boulevard Southbound				Oleander Drive Westbound				Independence Boulevard Northbound				Oleander Drive Eastbound						
Start Time	Left	Thru	Right	Trucks	Left	Thru	Right	Trucks	Left	Thru	Right	Trucks	Left	Thru	Right	Trucks	Exclu. Total	Inclu. Total	Int. Total
07:00 AM	0	0	0	0	0	0	0	0	0	0	0	0	0	1	0	0	0	1	1
*** Break / No Volume ***																			
07:45 AM	0	1	0	0	0	0	0	0	0	1	0	0	0	0	0	0	0	2	2
Total	0	1	0	0	0	0	0	0	0	1	0	0	0	1	0	0	0	3	3
08:00 AM	0	0	0	0	0	0	0	0	0	1	0	0	0	0	0	0	0	1	1
08:15 AM	0	0	0	0	0	0	0	0	0	2	0	0	0	0	0	0	0	2	2
*** Break / No Volume ***																			
08:45 AM	0	0	0	0	0	0	0	0	0	0	0	0	0	1	0	0	0	1	1
Total	0	0	0	0	0	0	0	0	0	3	0	0	0	1	0	0	0	4	4
*** Break / No Volume ***																			
04:00 PM	0	0	0	0	0	1	0	0	0	1	0	0	0	1	0	0	0	3	3
04:15 PM	0	1	0	0	0	1	0	0	0	0	0	0	0	0	0	0	0	2	2
04:30 PM	0	0	0	0	0	0	0	0	0	1	0	0	0	1	0	0	0	2	2
04:45 PM	0	0	0	0	0	0	0	0	0	6	0	0	0	0	0	0	0	6	6
Total	0	1	0	0	0	2	0	0	0	8	0	0	0	2	0	0	0	13	13
05:00 PM	0	0	0	0	0	0	0	0	0	1	0	0	0	0	0	0	0	1	1
05:15 PM	0	0	0	0	0	0	0	0	0	2	0	0	0	1	0	0	0	3	3
05:30 PM	0	0	0	0	0	0	0	0	0	2	0	0	0	0	0	0	0	2	2
*** Break / No Volume ***																			
Total	0	0	0	0	0	0	0	0	0	5	0	0	0	1	0	0	0	6	6
Grand Total	0	2	0	0	0	2	0	0	0	17	0	0	0	5	0	0	0	26	26
Apprch %	0	100	0		0	100	0		0	100	0		0	100	0				
Total %	0	7.7	0		0	7.7	0		0	65.4	0		0	19.2	0		0	100	

RAMEY KEMP & ASSOCIATES
5808 Faringdon Place, Suite 100
Raleigh, NC 27609
PH: 919 872-5115
FX: 919 878-5416
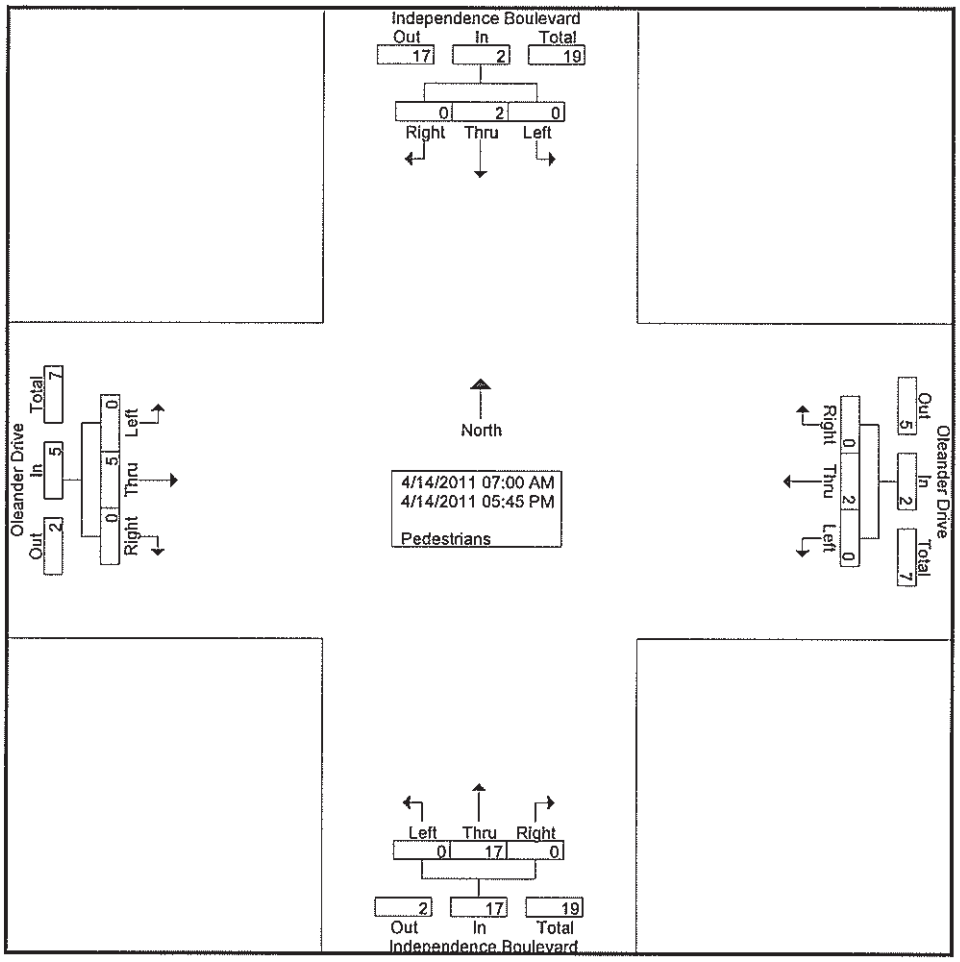
File Name : Oleander@Independence
Site Code : 04142011
Start Date : 4/14/2011
Page No : 2