RAMEY KEMP & ASSOCIATES
TRANSPORTATION ENGINEERS
5808 Faringdon Place, Suite 100
Raleigh, NC 27609
PH: 872-5115
FX: 878-5416

File Name : 10-24-12 Wilmington Market St & Porters Neck Rd
Site Code : 10241211
Start Date : 10/24/2012
Page No : 1

Groups Printed- Vehicles

	Porters Neck Road Southbound				Market Street Westbound				Porters Neck Road Northbound				Market Street Eastbound						
Start Time	Right	Thru	Left	Trks	Right	Thru	Left	Trks	Right	Thru	Left	Trks	Right	Thru	Left	Trks	App. Total	Int. Total	Int. Total
07:00 AM	4	0	16	1	19	5	70	0	33	161	2	2	1	4	10	0	3	325	328
07:15 AM	12	0	17	1	32	8	131	0	22	162	6	4	1	7	10	0	5	408	413
07:30 AM	12	0	12	3	31	6	135	1	57	206	5	9	1	7	19	2	15	491	506
07:45 AM	18	0	21	3	43	9	92	2	63	239	8	6	2	6	11	2	13	512	525
Total	46	0	66	8	125	28	428	3	175	768	21	21	5	24	50	4	36	1736	1772
08:00 AM	13	0	15	0	41	8	112	0	63	188	6	3	4	9	19	0	3	478	481
08:15 AM	12	2	36	0	28	10	109	1	59	168	12	4	2	10	12	0	5	460	465
08:30 AM	15	0	29	0	23	5	108	0	54	162	8	1	4	9	10	0	1	427	428
08:45 AM	14	0	30	0	20	11	119	1	61	181	13	6	6	10	12	0	7	477	484
Total	54	2	110	0	112	34	448	2	237	699	39	14	16	38	53	0	16	1842	1858
BREAK																			
04:00 PM	14	0	24	0	31	15	106	0	55	239	14	0	12	14	31	1	1	555	556
04:15 PM	25	0	30	1	23	10	128	1	55	209	18	3	6	9	33	1	6	546	552
04:30 PM	19	0	27	0	25	15	107	2	73	242	16	1	6	16	22	0	3	568	571
04:45 PM	23	0	39	1	35	12	95	0	82	263	26	0	34	19	36	1	2	664	666
Total	81	0	120	2	114	52	436	3	265	953	74	4	58	58	122	3	12	2333	2345
05:00 PM	24	0	47	0	35	7	100	1	70	288	22	0	32	14	37	0	1	676	677
05:15 PM	25	0	50	0	19	10	105	2	85	237	20	3	20	20	34	0	5	625	630
05:30 PM	31	0	43	0	25	5	95	0	69	282	14	1	12	7	25	2	3	628	631
05:45 PM	20	0	33	0	18	16	116	1	84	246	13	0	22	11	40	0	1	619	620
Total	100	0	173	0	97	38	416	4	328	1053	69	4	86	52	136	2	10	2548	2558
06:00 PM	25	0	34	0	14	10	86	0	59	220	7	2	16	12	23	0	2	506	508
06:15 PM	29	0	28	0	17	9	79	0	79	232	16	2	6	14	32	0	2	541	543
Grand Total	335	2	531	10	479	171	1893	12	1143	3925	226	47	187	198	416	9	78	9506	9584
Apprch %	38.6	0.2	61.2		18.8	6.7	74.4		21.6	74.1	4.3		23.3	24.7	51.9				
Total %	3.5	0	5.6		5	1.8	19.9		12	41.3	2.4		2	2.1	4.4		0.8	99.2	

RAMEY KEMP & ASSOCIATES
TRANSPORTATION ENGINEERS
5808 Faringdon Place, Suite 100
Raleigh, NC 27609
PH: 872-5115
FX: 878-5416

File Name : 10-24-12 Wilmington Market St & Porters Neck Rd
Site Code : 10241211
Start Date : 10/24/2012
Page No : 2
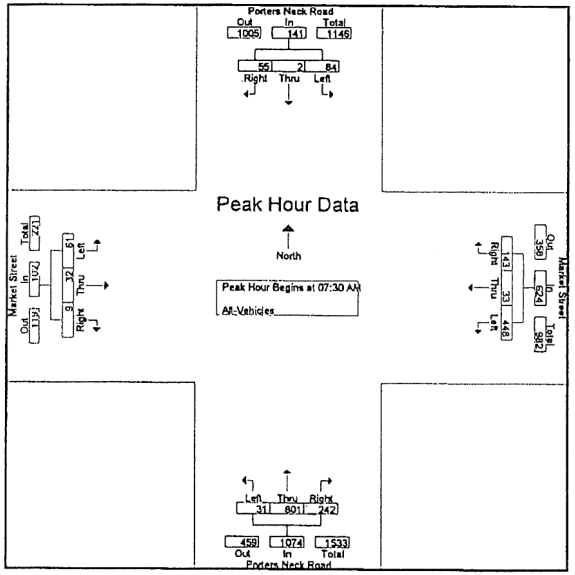
	Porters Neck Road Southbound				Market Street Westbound				Porters Neck Road Northbound				Market Street Eastbound				
Start Time	Right	Thru	Left	App. Total	Right	Thru	Left	App. Total	Right	Thru	Left	App. Total	Right	Thru	Left	App. Total	Int. Total
Peak Hour Analysis From 07:00 AM to 11:45 AM - Peak 1 of 1																	
Peak Hour for Entire Intersection Begins at 07:30 AM																	
07:30 AM	12	0	12	24	31	6	[illegible]	[illegible]	57	206	5	268	1	7	[illegible]	27	491
07:45 AM	[illegible]	0	21	39	43	9	92	144	63	239	8	310	2	6	11	19	512
08:00 AM	13	0	15	28	41	8	112	161	63	188	6	257	4	9	19	32	478
08:15 AM	12	2	36	50	28	10	109	147	59	168	12	239	2	10	12	24	460
Total Volume	55	2	84	141	143	33	448	624	242	801	31	1074	9	32	61	102	1941
% App. Total	39	1.4	59.6		22.9	5.3	71.8		22.5	74.6	2.9		8.8	31.4	59.8		
PHF	.764	.250	.583	.705	.831	.825	.830	.907	.960	.838	.646	.866	.563	.800	.803	.797	.948